PRELIMINARY PLAT AND MASTER DEVELOPMENT PLAN FOR

HALLAMARK

LOTS 1 - 69, AND COMMON AREA "A" (PRIVATE STREETS & PUBLIC UTILITIES) COMMON AREAS "B-1" & "B-2" (OPEN SPACE, DRAINAGE, UTILITIES & LANDSCAPE), COMMON AREA "C-1" & "C-2" (FUNCTIONAL OPEN SPACE & DRAINAGE), AND COMMON AREA "D-1" THRU "D-11" (NATURAL OPEN SPACE)

2500963

GENERAL NOTES FOR PHASE I:

1. GROSS AREA OF DEVELOPMENT: 44.36 ACRES
2. RESIDENTIAL UNITS PER ACRE: 1.6 UNITS/ACRE
3. EXISTING ZONING: R1-10 SINGLE FAMILY RESIDENTIAL.
4. THE PROJECT SITE IS SUBJECT TO TRANSITIONAL ZONING ORDINANCE NO. 02-17 ADOPTED JUNE 19, 2002 AND ZONING INTERPREATION FOR OPEN SPACE AND BUFFER YARD STANDARDS FOR HALLAQ PROPERTIES DATED FEBURUAY 2, 2021.
5. TOTAL RESIDENTIAL LOTS: 69
6. MINIMUM LOT SIZE ALLOWED: 12,000 SF (PER OPEN SPACE AND BUFFER YARD STANDARDS FOR HALLAQ PROPERTIES ZONING INTERPRETATION DATED FEBRUARY 2, 2021)
   MINIMUM LOT SIZE PROVIDED: 12,000 SF
7. TOTAL MILES OF NEW PUBLIC STREETS: 0.0 MILES
8. TOTAL MILES OF NEW PRIVATE STREETS: 0.97 MILES
9. ASSURANCES FOR WATER SERVICE, SITE STABILIZATION AND LANDSCAPING MUST BE POSTED PRIOR TO THE ISSUANCE OF GRADING PERMITS.
10. BUILDING HEIGHT MAXIMUM: 25' OR 2 STORIES. LOTS 21, 33, 47, 66 & 67 ARE RESTRICTED TO SINGLE-STORY
11. THIS PROJECT IS DESIGNED TO MEET THE CRITERIA OF THE RIPARIAN HABITAT PROTECTION OVERLAY DISTRICT USING THE CRITICAL RESOURCE AREA BOUNDARY (CRA) OF THE ENVIRONMENTALLY SENSITIVE LANDS MAP.
12. TOTAL AMOUNT OF UNDISTURBED NATURAL OPEN SPACE (COMMON AREA "D"): 331,817 SF (7.62 AC)
13. TOTAL AMOUNT OF OPEN SPACE (COMMON AREAS "B" & "C"): 381,957 SF, (8.77 AC)
14. LANDSCAPED BUFFER YARDS TYPE AND LOCATION:
    NORTH: TYPE A* - VARIES, 10'-20' AS SHOWN
    EAST: TYPE A - VARIES, 10'-20' AS SHOWN
    WEST: (LA CHOLLA): TYPE B - 25' R-6: NO BUFFER
    SOUTH: (LAMBERT LANE): TYPE B - 25' R-6: NO BUFFER
    * PER OPEN SPACE AND BUFFER YARD STANDARDS FOR HALLAQ PROPERTIES ZONING INTERPRETATION DATED FEBRUARY 2, 2021
15. OFF-STREET PARKING: REQUIRED - 276 (PARKING - 138, GUEST - 138);
    PROVIDED - 276 (PARKING - 138, GUEST - 138)
16. ALL COMMON AREAS WILL BE OWNED AND MAINTAINED BY THE PROPERTY OWNERS ASSOCIATION.
17. BUILDING SETBACKS REQUIRED: FRONT 25', SIDES 10' AND REAR 25'
18. DESIGN SPEED IS 25 MPH. THE DESIGN VEHICLE IS WB-40.
19. ALL NEW PUBLIC ROADS WITHIN AND ADJACENT TO THIS PROJECT WILL BE CONSTRUCTED IN ACCORDANCE WITH APPROVED PLANS. SEPARATE PUBLIC IMPROVEMENT AND CONSTRUCTION PLANS WILL BE SUBMITTED TO THE TOWN ENGINEER'S OFFICE FOR REVIEW AND APPROVAL.
20. ANY RELOCATION OR MODIFICATION OF EXISTING UTILITIES AND/OR PUBLIC IMPROVEMENTS NECESSITATED BY THE PROPOSED DEVELOPMENT WILL BE AT NO EXPENSE TO THE PUBLIC.
21. THIS DEVELOPMENT MUST COMPLY WITH THE ORO VALLEY WATER UTILITY SPECIFICATIONS MANUAL DURING ALL PHASES OF CONSTRUCTION.
22. THIS PROJECT WILL BE SERVED BY ORO VALLEY WATER UTILITY WHICH HAS BEEN DESIGNATED AS HAVING AN ASSURED 100 YEAR WATER SUPPLY BY THE DIRECTOR OF WATER RESOURCES.
23. ALL WELLS WITHIN THE PROJECT MUST BE ABANDONED PER ADWR REGULATIONS.
24. A LINE EXTENSION AGREEMENT MUST BE IN PLACE PRIOR TO ANY PUBLIC WATER INFRASTRURE CONSTRUCTION WORK COMMENCING FOR THIS PROJECT
25. ORO VALLEY WATER UTILITY WILL BE THE WATER SERVICE PROVIDER.
26. MATERIALS WITHIN SIGHT VISIBILITY TRIANGLES MUST BE PLACED SO AS NOT TO INTERFERE WITH A VISIBILITY PLAN DESCRIBED BY TWO HORIZONTAL LINES LOCATED 30 INCHES AND 72 INCHES ABOVE FINISHED GRADE OF THE ROADWAY SURFACE.
27. APPROVED FIRE APPARATUS ACCESS ROADWAYS AND FIRE HYDRANTS CONNECTED TO AN APPROVED WATER SUPPLY OF 1000 GPM, 2 HOURS FOR FIRE PROTECTION MUST BE INSTALLED AND IN SERVICE PRIOR TO COMBUSTIBLE MATERIAL DELIVERY TO THE SITE. TEMPORARY CONSTRUCTION OFFICE TRAILERS ARE CONSIDERED COMBUSTIBLE MATERIAL.
28. ELECTRIC GATE OPERATORS SHALL BE LISTED IN ACCORDANCE WITH UL 325. GATES INTENDED FOR AUTOMATIC OPERATION SHALL BE DESIGNED, CONSTRUCTED, AND INSTALLED TO COMPLY WITH THE REQUIREMENTS OF ASTM F 2200.
29. ROADWAYS SHALL BE SURFACED WITH ALL-WEATHER MATERIAL CAPABLE OF SUPPORTING AN IMPOSED LOAD OF 82,000 POUNDS.
30. TEMPORARY STREET SIGNS MUST BE INSTALLED AT EACH STREET INTERSECTION WHEN CONSTRUCTION OF NEW ROADWAYS ALLOWS PASSAGE OF VEHICLES. ALL STRUCTURES UNDER CONSTRUCTION MUST BE CLEARLY IDENTIFIED WITH AN APPROVED ADDRESS.
31. CIVIL IMPROVEMENT PLAN MUST BE APPROVED PRIOR TO THE ISSUANCE OF ANY PERMITS BY THE TOWN ENGINEER AND/OR BUILDING OFFICIAL.
32. ALL WEATHER ACCESS MUST BE PROVIDED TO ALL LOTS WITHIN THE SUBDIVISION.
33. THE FOLLOWING CODES AND STANDARDS SHALL BE APPLICABLE TO THIS DEVELOPMENT:
    - INTERNATIONAL BUILDING CODES WITH LOCAL AMENDMENTS
    - INTERNATIONAL RESIDENTIAL CODES WITH LOCAL AMENDMENTS
    - NATIONAL ELECTRICAL CODE
    - ADA STANDARDS FOR ACCESSIBLE DESIGN
    - GOLDER RANCH FIRE DISTRICT STANDARDS AND FORMS
    - INTERNATIONAL SWIMMING POOL AND SPA CODE WITH LOCAL AMENDMENTS
    - PAG STANDARD SPECIFICATIONS AND DETAILS FOR PUBLIC IMPROVEMENTS
    - TOWN OF ORO VALLEY DRAINAGE CRITERIA MANUAL
    - TOWN OF ORO VALLEY SUBDIVISION STREET STANDARDS AND POLICIES MANUAL
    - TOWN OF ORO VALLEY ZONING CODE, CURRENT REVISED
    - ORO VALLEY TOWN CODE, CURRENT REVISED
34. ALL SIGNAGE AND LIGHTING TO BE ADDRESSED AS PART OF A SEPARATE REVIEW AND APPROVAL PROCESS.
35. ALL DRAINAGE WAYS WILL BE CONSTRUCTED ACCORDING TO APPROVED PLANS PRIOR TO THE ISSUANCE OF ANY PERMITS FROM THE TOWN ENGINEER AND/OR BUILDING OFFICIAL FOR PARCELS AFFECTED.
36. WATER INFRASTRUCTURE AS REPRESENTED ON THE PLAT OR DEVELOPMENT PLAN IS FOR INFORMATIONAL PURPOSES ONLY. A SEPARATE PUBLIC WATER IMPROVEMENT PLAN MUST BE SUBMITTED TO THE ORO VALLEY WATER UTILITY FOR TECHNICAL REVIEW AND COMPLIANCE WITH APPLICABLE STATUTES, CODES AND SPECIFICATIONS. ADDITIONAL PUBLIC WATER INFRASTRUCTURE MAY BE DEEMED NECESSARY UPON REVIEW OF THE PUBLIC WATER IMPROVEMENT PLAN SUBMITTAL.
37. DRAINAGE MUST BE COLLECTED AND RELEASED FROM A PROPOSED DEVELOPMENT AT THE LOCATIONS AND IN THE MANNER EXISTING PRIOR TO DEVELOPMENT.
38. DRAINAGE WAYS MUST BE PROVIDED WHERE NECESSARY TO CARRY DRAINAGE FLOWS THROUGH OR FROM THE DEVELOPMENT AND SUCH DRAINAGE WAYS MUST BE DEDICATED AND MAINTAINED BY PROPERTY OWNERS OR PROPERTY OWNERS ASSOCIATION.
39. DRAINAGE WAYS MUST BE DESIGNED TO NOT DISCHARGE ONTO PAVED STREETS, EASEMENTS OR PARKING AREAS.
40. PARKING AREAS MUST NOT BE USED AS DETENTION BASINS.
41. ALL TRAIL EASEMENTS INDICATED ARE FOR PRIVATE USE BY RESIDENTS AS PERMANENT, NON-MOTORIZED TRAIL EASEMENTS.
42. TRAIL LOCATIONS, AS INDICATED ON THIS PLAN, MUST BE FIELD VERIFIED BY TOWN STAFF PRIOR TO CONSTRUCTION AND ARE SUBJECT TO ADJUSTMENT.
43. TRAILS MUST BE POSITIONED IN A MANNER TO AVOID VEGETATION AND MINIMIZE POTENTIAL FOR EROSION.
44. FOR RESIDENTIAL DEVELOPMENTS, CONSTRUCTION OF ALL RECREATIONAL AMENITIES AND PUBLIC OR PRIVATE TRAILS WITHIN THE PROJECT LIMITS MUST BE COMPLETED BY THE TIME 35% OF BUILDING PERMITS ARE ISSUED PER SECTION 26.5 OF THE ZONING CODE.
45. THE PROPERTY OWNERS ASSOCIATION WILL OWN AND MAINTAIN ALL TRAILS.

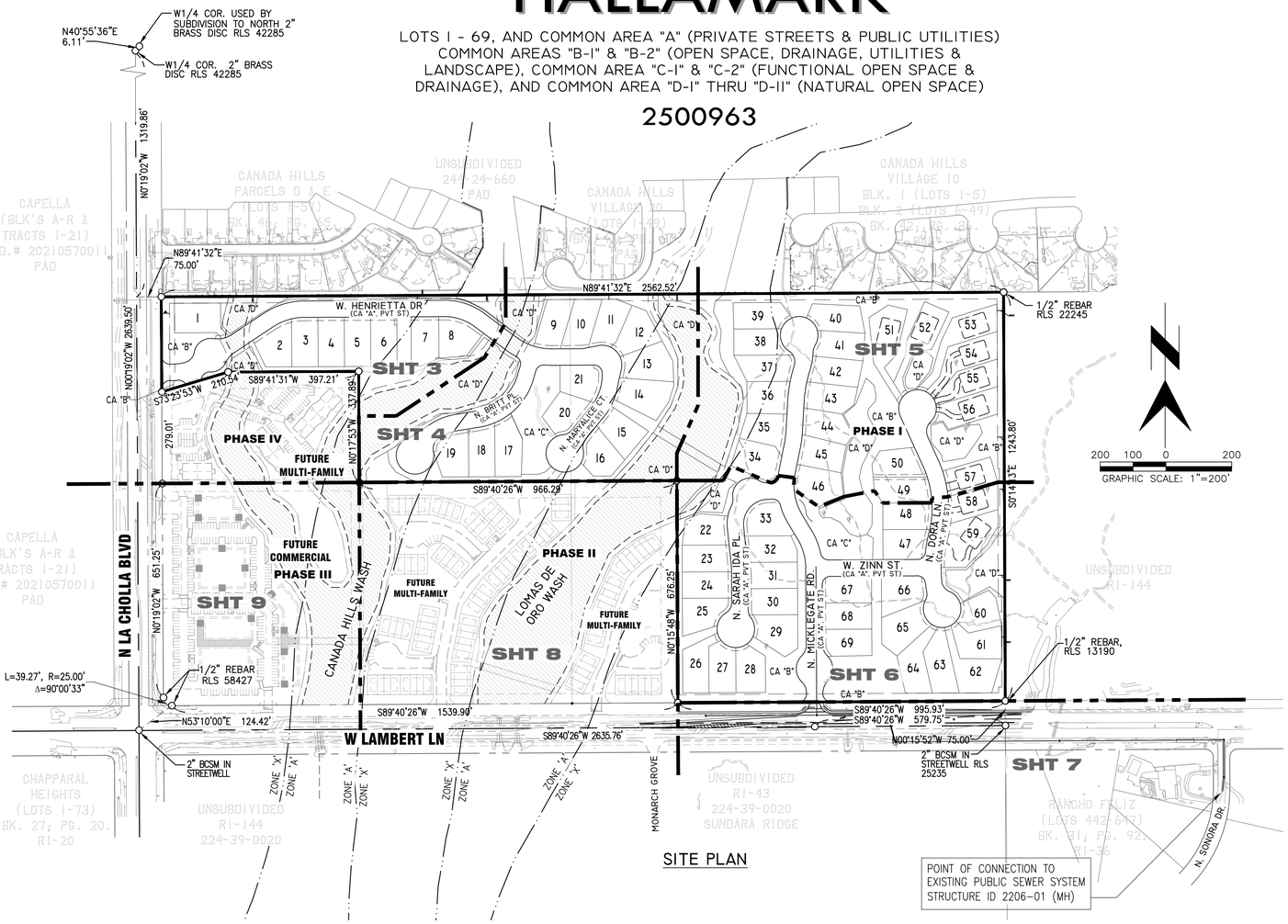

SITE PLAN

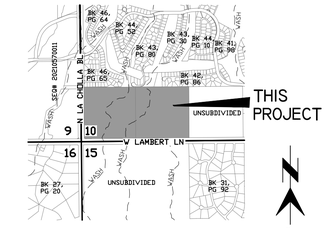

LOCATION MAP

PORTION OF SECTION 10, T 12 S, R 13 E, G & SRM. TOWN OF ORO VALLEY, PIMA COUNTY, ARIZONA
Lat: 32°23'54" N Long: 111°00'27" W

OWNER

ISSA & HENRIETTA HALLAQ
2425 E CALLE LOS ALTOS
TUCSON, AZ. 85718
PHONE: 520-299-8146
EMAIL: HAHALLAQ@GMAIL.COM

DEVELOPER

D.R. HORTON
6875 N. ORACLE RD, SUITE 125
TUCSON, AZ 85704
PHONE: 520-572-5096
CONTACT: LORENZO HERNANDEZ
EMAIL: LMHERNANDEZ1@DRHORTON.COM

ENGINEER

RICK
3945 E. FORT LOWELL RD, SUITE 111
TUCSON, AZ 85712
PHONE: 520-745-1000
CONTACT: COREY THOMPSON, P.E.
EMAIL: CTHOMPSON@RICKENGINEERING.COM

LANDSCAPE ARCHITECT

RICK
3945 E. FORT LOWELL RD, SUITE 111
TUCSON, AZ 85712
PHONE: 520-745-1000
CONTACT: MARK FELLINGER, RLA
EMAIL: MFELLINGER@RICKENGINEERING.COM

GEOTECHNICAL ENGINEER

PROTEX
1102 W. SOUTHERN AVE. SUITE 4
TEMPE, AZ 85282
PHONE: 602-272-7891
CONTACT: JACK STRANSKY, P.E.
EMAIL: JSTRANSKY@PROTEX-AZ.COM

BASIS OF BEARING

PIMA COUNTY COORDINATE SYSTEM (PCCS) ZONE 1 EAST

BASIS OF ELEVATION

PIMA COUNTY OPUS CONTROL POINT 12S13E_J15. A 1/2" REBAR "RLS 13190" IN THE NORTHWEST CONRER OF LAMBERT LANE AND LAMBERT LANE PARK INTERSECTION. ELEV.=2604.32 (NAVD88)

GENERAL NOTES FOR PHASE I (CONTINUED):

46. THE FOLLOWING LOTS ARE AFFECTED BY THE TOWN OF ORO VALLEY FLOODPLAIN REGULATIONS: 47-49, 65, 66, 68 & 69.
47. A FLOODPLAIN USE PERMIT AND/OR FINISHED FLOOR ELEVATION CERTIFICATES ARE REQUIRED FOR THE FOLLOWING LOT(S) 47-49, 65, 66, 68 & 69.
48. LOTS 6-8, 12-16, 19 & 34-39 ARE LOCATED WITHIN A FEMA ZONE "A". SPECIAL FLOOD HAZARD AREA (SFHA), AS SHOWN ON FEMA FLOOD INSURANCE RATE MAP (FIRM) PANEL NUMBER 04019C1070L, WITH EFFECTIVE DATE JUNE 16, 2011. A CONDITIONAL LETTER OF MAP REVISION (CLOMR) (CASE # 09-__-____) HAS BEEN APPROVED BY THE TOWN OF ORO VALLEY AND SUBMITTED TO FEMA ON [____] WITH THE INTENT OF REMOVING THESE LOTS FROM THE FEMA FLOODPLAIN. BECAUSE THE CLOMR DOES NOT GUARANTEE THAT THESE LOTS WILL BE REMOVED FROM THE FEMA FLOODPLAIN, UNLESS AND UNTIL THE EFFECTIVE FEMA FIRM HAS BEEN REVISED, TOWN OF ORO VALLEY REVIEW AND APPROVAL OF BUILDING PERMITS FOR THESE LOTS IS REQUIRED PRIOR TO PERMIT ISSUANCE. IF THE EFFECTIVE FIRM HAS NOT BEEN REVISED, FLOODPLAIN USE PERMITS AND ELEVATION CERTIFICATES FOR ALL STRUCTURES SHALL BE REQUIRED. FEDERAL LAW REQUIRES THAT A FLOOD INSURANCE POLICY BE OBTAINED AS A CONDITION OF A FEDERALLY-BACKED MORTGAGE OR LOAN THAT IS SECURED BY A BUILDING LOCATED WITHIN AN EFFECTIVE SFHA.
49. REVISING THE EFFECTIVE FIRM REQUIRES COMPLETION OF THE INFRASTRUCTURE SHOWN IN THE CLOMR; PREPARATION OF AS-BUILT PLANS FOR THE INFRASTRUCTURE; TOWN OF ORO VALLEY AND FEMA REVIEW AND APPROVAL OF THE AS-BUILT PLANS; FEMA ISSUANCE OF A LETTER OF MAP REVISION (LOMR); AND COMPLETION OF A PUBLIC COMMENT PERIOD. UNLESS AND UNTIL THE EFFECTIVE FIRM HAS BEEN REVISED, THERE IS SOME RISK TO AN OWNER OF ANY LOTS LOCATED WITHIN THE EFFECTIVE FEMA FLOODPLAIN THAT THE LIMITS OF THE FLOODPLAIN WILL NOT BE REVISED

DEVELOPMENT PLAN PHASING NOTES:

1. THE MASTER DEVELOPMENT PLAN SHOWN ON SHEET 10 PROVIDES FOR THE GENERAL LAYOUT OF THE ENTIRE PROPERTY COMPRISING OF 4 PHASES. PLAN SHEETS ALSO INCLUDE A SPECIFIC DEVELOPMENT PLAN AND PRELIMINARY PLAT FOR PHASE 1. ALL OTHER PHASES WILL REQUIRE SPECIFIC DEVELOPMENT PLANS AND/OR PLATS, LANDSCAPE PLANS, NATIVE PLANT PRESERVATION PLANS, SOILS REPORTS, DRAINAGE REPORTS, AND RECREATION AREA PLANS (AS NEEDED), WITH ALL REQUIRED TOWN CODE DETAILS. IN THE EVENT THAT FUTURE PLANS AND REPORTS REQUIRE REDESIGN, THE MASTER DEVELOPMENT PLANS SHALL BE MODIFIED ACCORDINGLY.
2. SEE SHEET 10 FOR INFORMATION REGARDING PHASES II THROUGH IV.

APPROVALS

TOWN ENGINEER _____ DATE

PLANNING AND ZONING ADMINISTRATOR _____ DATE

ORO VALLEY WATER UTILITY DIRECTOR _____ DATE

ASSESSOR'S PARCEL NO.

224-24-012A
224-24-0130

SHEET INDEX

Registered Professional Engineer (Civil) CERTIFICATE NO. 22217 COREY THOMPSON Date Signed 1-9-26 ARIZONA U.S.A.

PRELIMINARY PLAT FOR

HALLAMARK

LOTS 1 - 69, AND COMMON AREA "A" (PRIVATE STREETS & PUBLIC UTILITIES) COMMON AREAS "B-1" & "B-2" (OPEN SPACE, DRAINAGE, UTILITIES & LANDSCAPE), COMMON AREA "C-1" & "C-2" (FUNCTIONAL OPEN SPACE & DRAINAGE), AND COMMON AREA "D-1" THRU "D-11" (NATURAL OPEN SPACE)

PORTION OF THE S 1/2 OF THE SW 1/4 OF SECTION 10, TOWNSHIP 12 SOUTH, RANGE 13 EAST GILA & SALT RIVER MERIDIAN, TOWN OF ORO VALLEY, PIMA COUNTY, ARIZONA

January 9, 2026 SCALE: AS SHOWN CONTOUR INTERVAL: 1'
RELATED CASE #'S: 2500142
OV99951 [(O) 02-17]

520-795-1000
rickengineering.com
3945 E FORT LOWELL RD #111
TUCSON, AZ 85712
RICK
SAN DIEGO ORANGE RIVERSIDE SACRAMENTO SAN LUIS OBISPO
SANTA CLARITA PHOENIX TUCSON LAS VEGAS DENVER

C:\RICK\Projects\T05000\5577_Hallamark_Sub\Civil\PlanSets\Preliminary Plat\5577-Pre-Plat-01-02.dwg

LEGEND

- PROPERTY BOUNDARY
- CENTERLINE
- RIGHT OF WAY
- LOT LINE
- CLEARING LIMITS
- EASEMENT
- EXISTING PAVEMENT
- EXISTING WATERLINE
- EXISTING SEWER LINE
- EXISTING ELECTRIC
- EXISTING OVERHEAD ELECTRIC
- EXISTING GAS
- EXISTING FENCE
- EXISTING MAJOR CONTOUR
- EXISTING MINOR CONTOUR
- PROPOSED BUILDING SETBACK
- PROPOSED CURB
- PROPOSED WATERLINE & VALVE
- PROPOSED SEWER LINE W/ MANHOLE
- PROPOSED SEWER MANHOLE ID# (SEE MANHOLE TABLE, THIS SHT)
- PROPOSED CULVERT
- PROPOSED MAJOR CONTOUR
- PROPOSED MINOR CONTOUR
- EXISTING POWER POLE
- EXISTING SIGN
- EXISTING WATER METER
- EXISTING SEWER MANHOLE
- PROPOSED SPOT SHOT
- PROPOSED SLOPE
- PROPOSED MONUMENT
- PROPOSED DUMPED RIPRAP
- DISCHARGE ARROW
- PROPOSED SIGN
- EXISTING SLOPES >25%
- FOUND SURVEY MONUMENT AS NOTED
- CORNER TO BE SET BY AN RLS FOLLOWING COMPLETION OF CONSTRUCTION
- FOUND 2" BRASS CAP SURVEY MONUMENT
- S SINGLE – STORY RESIDENCE
- PLANNED WATERSHED BOUNDARY
- PLANNED 100-YR FLOOD LIMIT
- EXIST 100-YR FLOOD LIMIT
- PLANNED EROSION HAZARD SETBACK

ABBREVIATIONS

ACP	ALUMINUM CAPPED PIPE
APN	ASSESSORS PARCEL NUMBER
BCHH	BRASS CAP IN HAND HOLE
BCF	BRASS CAP FLUSH
BCSM	BRASS CAP SURVEY MONUMENT
BOT	BOTTOM OF BASIN ELEVATION
BW	BOTTOM OF WALL
(C)	CALCULATED
C/L	CENTERLINE
CY	CUBIC YARDS
EG	EXISTING GRADE
EL	ELEVATION
EOP	EDGE OF PAVEMENT
FD	FOUND
FF	FINISHED FLOOR
FG	FINISHED GRADE
FL	FLOW LINE
G	GAS
HP	HIGH POINT
HW	HIGH WATER ELEVATION
L	LENGTH
LP	LOW POINT
(M)	MEASURED
NTS	NOT TO SCALE
P/L	PROPERTY LINE
PAD	PROPOSED PAD ELEVATION
PC	POINT OF CURVE
PUE	PUBLIC UTILITY EASEMENT
(R)	RECORDED
R	RADIUS
R/W	RIGHT OF WAY
SVT	SIGHT VISIBILITY TRIANGLE
TC	TOP OF CURB
TOV	TOWN OF ORO VALLEY
TW	TOP OF WALL
TYP	TYPICAL
VNAE	VEHICLE NON ACCESS EASEMENT
W	WATER
WS	WATER SERVICE

SEWER MANHOLE TABLE

MANHOLE #	CONNECTIONS	DEPTH (FT.)
MH#1	RIM=2583.40 INV. IN (N)=2575.31 INV. OUT (S)=2575.26	8.14
MH#2	RIM=2590.69 INV. IN (W)=2581.21 INV. OUT (S)=2581.01	9.68
MH#3	RIM=2598.61 INV. IN (W)=2583.69 INV. OUT (E)=2583.69	15.08
MH#4	RIM=2600.68 INV. IN (N)=2587.39 INV. OUT (E)=2587.19	13.52
MH#5	RIM=2597.73 INV. IN (W)=2588.03 INV. OUT (S)=2587.83	9.90
MH#6	RIM=2599.72 INV. IN (N)=2589.47 INV. IN (W)=2589.30 INV. OUT (E)=2589.27	10.46
MH#7	RIM=2604.17 INV. IN (W)=2590.82 INV. OUT (E)=2590.79	13.39
MH#8	RIM=2614.63 INV. IN (N)=2598.58 INV. IN (E)=2598.68 INV. OUT (S)=2598.48	16.15
MH#9	RIM=2615.59 INV. IN (NW)=2604.55 INV. OUT (S)=2604.55	11.03
MH#10	RIM=2621.98 INV. IN (N)=2607.46 INV. IN (W)=2607.56 INV. OUT (SE)=2607.36	14.62
MH#11	RIM=2629.25 INV. IN (N)=2617.37 INV. OUT (S)=2617.37	11.88
MH#12	RIM=2628.87 INV. IN (N)=2618.90 INV. OUT (S)=2618.80	10.07
MH#13	RIM=2628.29 INV. OUT (S)=2619.76	8.54
MH#14	RIM=2613.88 INV. IN (N)=2600.45 INV. IN (S)=2600.45 INV. OUT (W)=2600.25	13.63
MH#15	RIM=2615.12 INV. OUT (N)=2601.99	13.13
MH#16	RIM=2620.46 INV. IN (N)=2609.57 INV. OUT (S)=2609.47	10.98

SEWER MANHOLE TABLE

MANHOLE #	CONNECTIONS	DEPTH (FT.)
MH#17	RIM=2623.11 INV. OUT (S)=2612.00	11.11
MH#18	RIM=2626.35 INV. IN (NW)=2608.17 INV. IN (S)=2608.27 INV. OUT (E)=2608.07	18.28
MH#19	RIM=2626.42 INV. OUT (S)=2608.83 INV. OUT (N)=2608.73	17.69
MH#20	RIM=2617.27 INV. IN (S)=2610.20 INV. IN (N)=2610.16	7.10
MH#21	RIM=2616.32 INV. OUT (N)=2610.70	5.62
MH#22	RIM=2624.17 INV. IN (N)=2610.54 INV. IN (SW)=2610.54 INV. OUT (SE)=2610.34	13.83
MH#23	RIM=2623.27 INV. OUT (NE)=2613.09	10.18
MH#24	RIM=2625.40 INV. IN (NW)=2612.52 INV. OUT (S)=2612.42	12.98
MH#25	RIM=2627.54 INV. IN (W)=2612.88 INV. OUT (SE)=2612.78	14.76
MH#26	RIM=2626.98 INV. IN (NW)=2613.92 INV. IN (S)=2614.02 INV. OUT (E)=2613.82	13.19
MH#27	RIM=2623.86 INV. IN (SW)=2614.65 INV. OUT (N)=2614.55	9.32
MH#28	RIM=2622.84 INV. IN (W)=2615.36 INV. OUT (NE)=2615.26	7.58
MH#29	RIM=2623.13 INV. OUT (E)=2616.40	6.73
MH#30	RIM=2626.17 INV. IN (W)=2615.26 INV. OUT (SE)=2615.16	11.01
MH#31	RIM=2625.47 INV. IN (W)=2616.50 INV. OUT (E)=2616.40	9.07
MH#32	RIM=2632.98 INV. IN (SW)=2617.90 INV. OUT (E)=2617.80	15.17

SEWER MANHOLE TABLE

MANHOLE #	CONNECTIONS	DEPTH (FT.)
MH#33	RIM=2626.85 INV. OUT (NE)=2619.70	7.15
MH#35(F)	RIM=2603.85 INV. IN (NW)=2592.50 INV. OUT (E)=2592.30	11.55
MH#36(F)	RIM=2605.22 INV. IN (W)=2592.90 INV. IN (N)=2592.80 INV. OUT (S)=2592.70	12.52
MH#37(F)	RIM=2608.38 INV. IN (N)=2599.43 INV. IN (E)=2599.53 INV. OUT (S)=2599.33	9.06
MH#38(F)	RIM=2608.89 INV. IN (NE)=2600.68 INV. OUT (S)=2600.58	8.31
MH#39(F)	RIM=2611.01 INV. IN (E)=2603.60 INV. OUT (SW)=2603.50	7.50
MH#40(F)	RIM=2616.53 INV. OUT (W)=2607.68	8.85
MH#41(F)	RIM=2615.33 INV. OUT (W)=2605.65	9.68
MH#42(F)	RIM=2607.30 INV. IN (W)=2594.75 INV. OUT (E)=2594.65	12.66
MH#43(F)	RIM=2607.42 INV. IN (W)=2595.17 INV. IN (N)=2595.37 INV. IN (S)=2595.37 INV. OUT (E)=2595.17	12.25
MH#44(F)	RIM=2607.54 INV. IN (NE)=2599.25 INV. OUT (S)=2599.15	8.39
MH#45(F)	RIM=2609.31 INV. IN (NE)=2601.63 INV. IN (NW)=2601.73 INV. OUT (SW)=2601.53	7.78
MH#46(F)	RIM=2610.47 INV. OUT (SW)=2604.17	6.30
MH#47(F)	RIM=2615.15 INV. IN (W)=2605.57 INV. OUT (SE)=2605.47	9.69
MH#48(F)	RIM=2613.91 INV. OUT (E)=2607.04	6.86
MH#49(F)	RIM=2601.17 INV. OUT (N)=2596.22	4.95

SEWER MANHOLE TABLE

MANHOLE #	CONNECTIONS	DEPTH (FT.)
MH#50(F)	RIM=2603.51 INV. IN (NW)=2595.97 INV. OUT (E)=2595.87	7.64
MH#51(F)	RIM=2601.71 INV. IN (W)=2596.43 INV. OUT (SE)=2596.33	5.38
MH#52(F)	RIM=2608.73 INV. IN (N)=2597.96 INV. OUT (E)=2597.76	10.97
MH#53(F)	RIM=2610.52 INV. IN (NW)=2600.90 INV. OUT (S)=2600.90	9.62
MH#54(F)	RIM=2611.39 INV. IN (W)=2604.40 INV. OUT (SE)=2604.20	7.19
MH#55(F)	RIM=2612.53 INV. IN (N)=2605.74 INV. OUT (E)=2605.54	6.99
MH#56(F)	RIM=2619.05 INV. IN (NW)=2610.26 INV. OUT (S)=2610.17	8.88
MH#57(F)	RIM=2620.73 INV. IN (N)=2610.70 INV. OUT (SE)=2610.60	10.13
MH#58(F)	RIM=2623.39 INV. IN (E)=2611.25 INV. OUT (S)=2611.14	12.25
MH#59(F)	RIM=2618.27 INV. IN (N)=2611.76 INV. OUT (W)=2611.57	6.69
MH#60(F)	RIM=2623.15 INV. IN (E)=2612.77 INV. OUT (S)=2612.61	10.55
MH#61(F)	RIM=2619.76 INV. OUT (W)=2615.00	4.76
MH#2206-01	RIM=2578.45 INV. IN (N)=2572.30	6.15

NOTE: MANHOLES DESIGNATED WITH (F) ARE TO BE CONSTRUCTED WITH FUTURE POHASES OF PROJECT

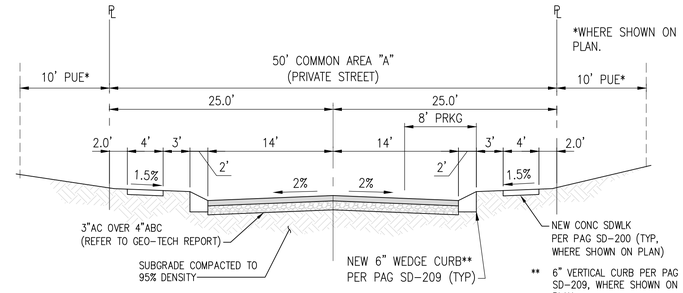

A TYPICAL LOCAL STREET SECTION - CROWNED
1/8"=1'

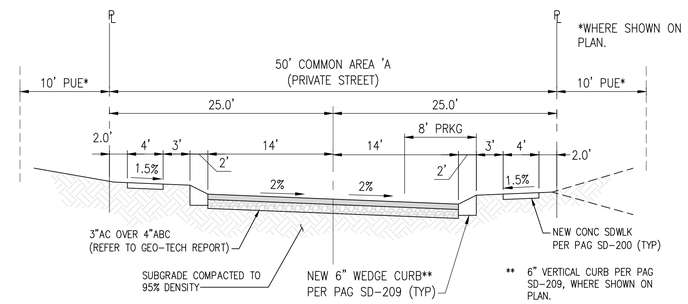

B TYPICAL LOCAL STREET SECTION - WARPED
1/8"=1'

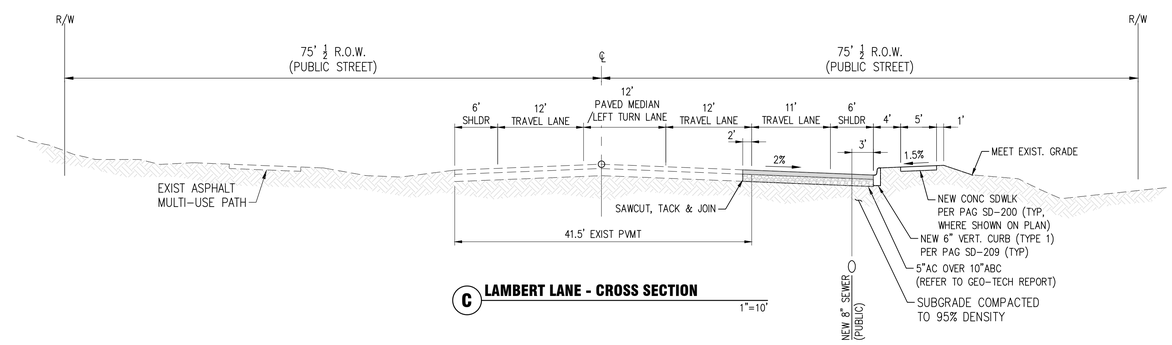

C LAMBERT LANE - CROSS SECTION
1"=10'

CURVE TABLE

CURVE #	LENGTH	RADIUS	DELTA
C1	105.16'	181.00'	33°17'23"
C2	116.24'	200.00'	33°17'57"
C3	117.12'	181.00'	37°04'30"
C4	129.42'	200.00'	37°04'30"
C5	124.13'	181.00'	39°17'34"
C6	202.91'	181.00'	64°13'48"
C7	74.75'	181.00'	23°39'39"
C8	106.59'	200.00'	30°32'13"
C9	147.40'	200.00'	42°13'33"
C10	56.67'	400.00'	8°07'03"
C11	85.83'	400.00'	12°17'40"
C12	76.49'	200.00'	21°54'50"
C13	160.73'	100.00'	92°05'23"
C14	51.03'	500.00'	5°50'53"
C16	170.35'	400.00'	24°24'02"
C17	223.49'	330.00'	38°48'12"

LINE TABLE

LINE #	LENGTH	DIRECTION
L1	106.62'	S89°40'58"W
L2	232.66'	S56°23'35"W
L3	424.31'	S89°41'32"W
L4	121.06'	N53°13'58"W
L5	178.97'	S89°41'32"W
L6	53.35'	N00°18'28"W
L7	159.51'	N38°59'06"E
L8	73.34'	S16°37'02"W
L9	62.32'	S80°50'50"W
L10	90.57'	S57°11'12"W
L13	29.56'	S32°48'48"E
L14	482.15'	N00°19'34"W
L16	56.69'	N30°51'47"W
L18	76.43'	N11°21'46"E
L20	85.40'	N03°14'43"E
L22	22.83'	N15°32'22"E

LINE TABLE

LINE #	LENGTH	DIRECTION
L24	19.50'	N06°22'28"W
L25	14.28'	N83°37'32"E
L26	61.15'	S85°54'56"W
L27	92.89'	S06°10'27"E
L29	164.86'	S00°19'34"E
L30	13.04'	S89°40'26"W
L31	361.48'	N89°40'26"E
L32	12.39'	S80°00'18"W
L33	59.47'	S09°59'42"E
L34	167.53'	N24°23'52"W
L35	32.00'	S65°36'08"W

Registered Professional Land Surveyor (Civil)
22217
COREY THOMPSON
Date Signed 1-7-26
ARIZONA U.S.A.

PRELIMINARY PLAT FOR

HALLAMARK

LOTS 1 - 69, AND COMMON AREA "A" (PRIVATE STREETS & PUBLIC UTILITIES) COMMON AREAS "B-1" & "B-2" (OPEN SPACE, DRAINAGE, UTILITIES & LANDSCAPE), COMMON AREA "C-1" & "C-2" (FUNCTIONAL OPEN SPACE & DRAINAGE), AND COMMON AREA "D-1" THRU "D-11" (NATURAL OPEN SPACE)

PORTION OF THE S 1/2 OF THE SW 1/4 OF SECTION 10, TOWNSHIP 12 SOUTH, RANGE 13 EAST GILA & SALT RIVER MERIDIAN, TOWN OF ORO VALLEY, PIMA COUNTY, ARIZONA

January 9, 2026 SCALE: AS SHOWN CONTOUR INTERVAL: 1'
RELATED CASE #'S: 2500142
OV99951 [(O) 02-17]

520-795-1000
rickengineering.com
3945 E FORT LOWELL RD #111
TUCSON, AZ 85712
RICK
SAN DIEGO ORANGE RIVERSIDE SACRAMENTO SAN LUIS OBISPO
SANTA CLARITA PHOENIX TUCSON LAS VEGAS DENVER

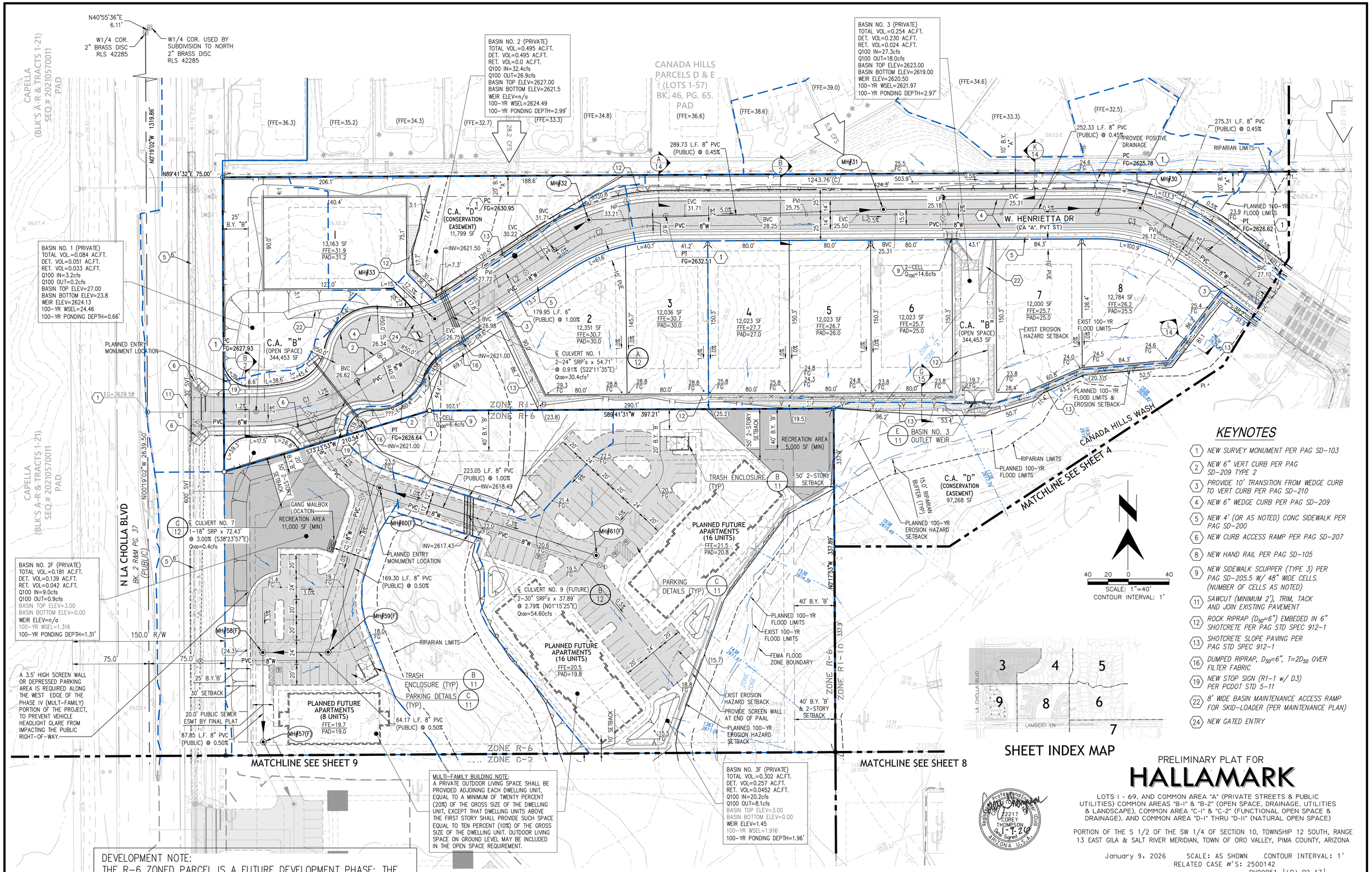

KEYNOTES

1. NEW SURVEY MONUMENT PER PAG SD-103
2. NEW 6" VERT CURB PER PAG SD-209 TYPE 2
3. PROVIDE 10' TRANSITION FROM WEDGE CURB TO VERT CURB PER PAG SD-210
4. NEW 6" WEDGE CURB PER PAG SD-209
5. NEW 4' (OR AS NOTED) CONC SIDEWALK PER PAG SD-200
6. NEW CURB ACCESS RAMP PER PAG SD-207
8. NEW HAND RAIL PER PAG SD-105
9. NEW SIDEWALK SCUPPER (TYPE 3) PER PAG SD-205.5 W/ 48" WIDE CELLS. (NUMBER OF CELLS AS NOTED)
11. SAWCUT (MINIMUM 2'), TRIM, TACK AND JOIN EXISTING PAVEMENT
12. ROCK RIPRAP (D_{50}=6") EMBEDED IN 6" SHOTCRETE PER PAG STD SPEC 912-1
13. SHOTCRETE SLOPE PAVING PER PAG STD SPEC 912-1
16. DUMPED RIPRAP, D_{50}=6", T=2D_{50} OVER FILTER FABRIC
19. NEW STOP SIGN (R1-1 w/ D3) PER PCDOT STD 5-11
22. 8' WIDE BASIN MAINTENANCE ACCESS RAMP FOR SKID-LOADER (PER MAINTENANCE PLAN)
24. NEW GATED ENTRY

DEVELOPMENT NOTE:
THE R-6 ZONED PARCEL IS A FUTURE DEVELOPMENT PHASE; THE FINAL DESIGN, PROPOSED USE AND LAYOUT MAY VARY, BUT WILL BE CONSISTENT WITH THE R-6 ZONING CRITERIA AND DEVELOPMENT STANDARDS, AS WILL BE DEMONSTRATED DURING THE DETAILED ENGINEERING PHASE (AND MDP AMENDMENT PHASE IF REQUIRED),

MULTI-FAMILY BUILDING NOTE:
A PRIVATE OUTDOOR LIVING SPACE SHALL BE PROVIDED ADJOINING EACH DWELLING UNIT, EQUAL TO A MINIMUM OF TWENTY PERCENT (20%) OF THE GROSS SIZE OF THE DWELLING UNIT, EXCEPT THAT DWELLING UNITS ABOVE THE FIRST STORY SHALL PROVIDE SUCH SPACE EQUAL TO TEN PERCENT (10%) OF THE GROSS SIZE OF THE DWELLING UNIT. OUTDOOR LIVING SPACE ON GROUND LEVEL MAY BE INCLUDED IN THE OPEN SPACE REQUIREMENT.

FOR CENTERLINE CURVE, LINE AND SEWER MANHOLE TABLE INFORMATION SEE SHEET 2

PRELIMINARY PLAT FOR

HALLAMARK

LOTS 1 - 69, AND COMMON AREA "A" (PRIVATE STREETS & PUBLIC UTILITIES) COMMON AREAS "B-1" & "B-2" (OPEN SPACE, DRAINAGE, UTILITIES & LANDSCAPE), COMMON AREA "C-1" & "C-2" (FUNCTIONAL OPEN SPACE & DRAINAGE), AND COMMON AREA "D-1" THRU "D-11" (NATURAL OPEN SPACE)

PORTION OF THE S 1/2 OF THE SW 1/4 OF SECTION 10, TOWNSHIP 12 SOUTH, RANGE 13 EAST GILA & SALT RIVER MERIDIAN, TOWN OF ORO VALLEY, PIMA COUNTY, ARIZONA

January 9, 2026 SCALE: AS SHOWN CONTOUR INTERVAL: 1'
RELATED CASE #'S: 2500142
OV99951 [(O) 02-17]

Registered Professional Engineer (Civil) CERTIFICATE NO. 22217 COREY THOMPSON Date Signed 1-9-26 ARIZONA, U.S.A.

RICK
520-795-1000
rickengineering.com
3945 E FORT LOWELL RD #111
TUCSON, AZ 85712
SAN DIEGO ORANGE RIVERSIDE SACRAMENTO SAN LUIS OBISPO
SANTA CLARITA PHOENIX TUCSON LAS VEGAS DENVER

C:\RICK\Projects\T05000\5577_Hallamark_Sub\Civil\PlanSets\Preliminary Plat\5577-Pre-Plat-03-09.dwg

CAÑADA HILLS WASH SCOUR DEPTHS	
RIVER STATION	SCOUR DEPTH (FT)
738	3.00
838	3.00
938	3.00
1038	3.00
1138	3.00
1238	3.00
1338	4.00
1383	3.50
1438	3.90
1538	3.00
1638	3.00
1738	3.00
1838	3.00
1938	3.00
2038	3.40
2072	3.00
2152	3.00
2238	3.00
2288	3.00

LOMAS DE ORO WASH SCOUR DEPTHS	
RIVER STATION	SCOUR DEPTH (FT)
4553	3.00
4653	3.00
4753	3.00
4853	3.00
4953	3.00
5053	3.00
5153	3.20
5253	3.00
5353	4.00
5453	4.30
5553	4.80
5653	4.40
5753	4.60
5853	4.40
5953	5.90
6023	4.90
6053	5.70
6153	6.30
6203	5.90

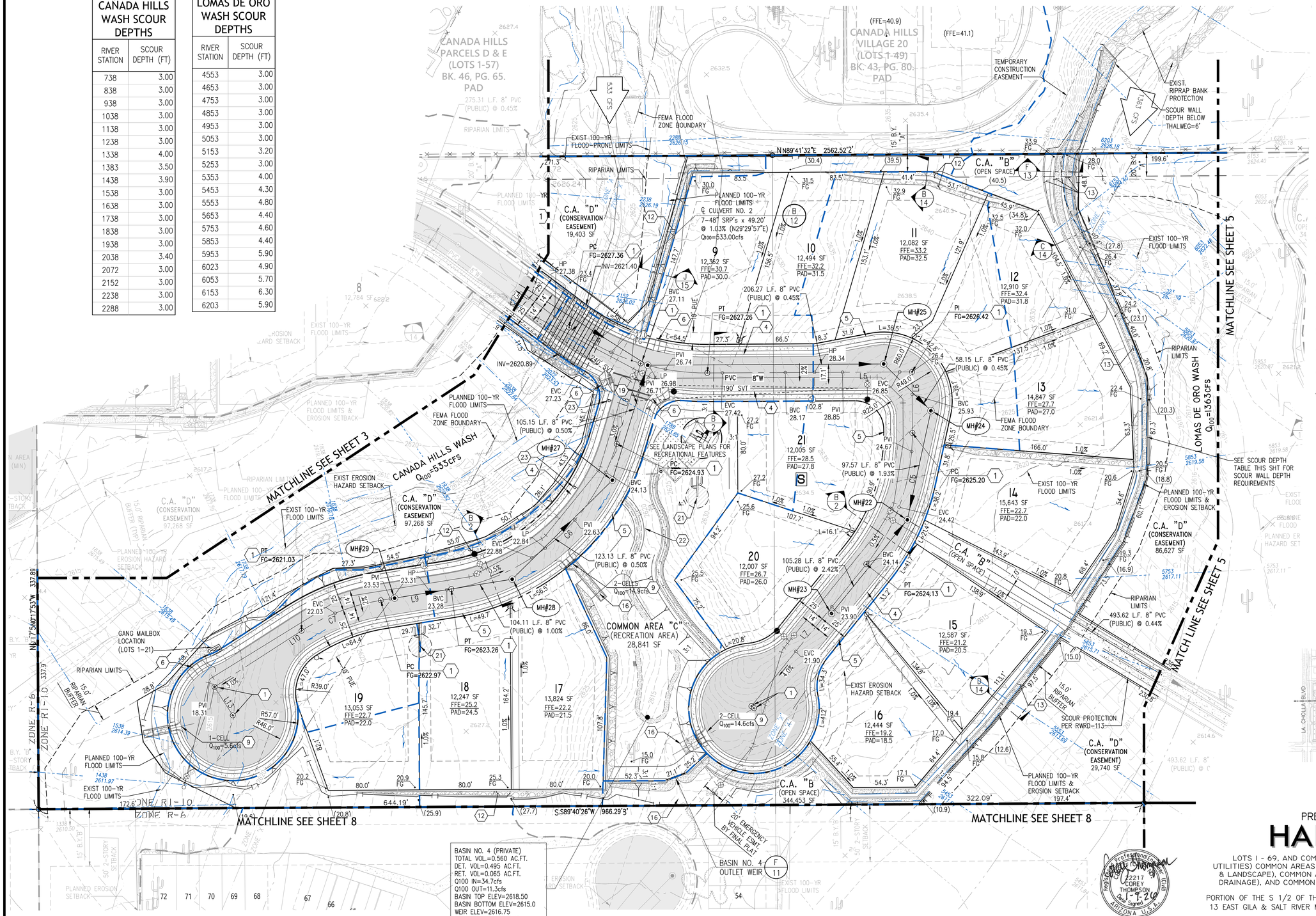

BASIN NO. 4 (PRIVATE)
TOTAL VOL.=0.560 AC.FT.
DET. VOL=0.495 AC.FT.
RET. VOL=0.065 AC.FT.
Q100 IN=34.7cfs
Q100 OUT=11.3cfs
BASIN TOP ELEV=2618.50
BASIN BOTTOM ELEV=2615.0
WEIR ELEV=2616.75
100-YR WSEL=2617.49
100-YR PONDING DEPTH=2.99'

FOR CENTERLINE CURVE, LINE AND SEWER MANHOLE TABLE INFORMATION SEE SHEET 2

40 20 0 40
SCALE: 1"=40'
CONTOUR INTERVAL: 1'

KEYNOTES

1. NEW SURVEY MONUMENT PER PAG SD-103
4. NEW 6" WEDGE CURB PER PAG SD-209
5. NEW 4' (OR AS NOTED) CONC SIDEWALK PER PAG SD-200
6. NEW CURB ACCESS RAMP PER PAG SD-207
8. NEW HAND RAIL PER PAG SD-105
9. NEW SIDEWALK SCUPPER (TYPE 3) PER PAG SD-205.5 W/ 48" WIDE CELLS. (NUMBER OF CELLS AS NOTED)
12. ROCK RIPRAP (D_{50}=6") EMBEDED IN 6" SHOTCRETE PER PAG STD SPEC 912-1
13. SHOTCRETE SLOPE PAVING PER PAG STD SPEC 912-1
16. DUMPED RIPRAP, D_{50}=6", T=$2D_{50}$ OVER FILTER FABRIC
19. NEW STOP SIGN (R1-1 w/ D3) PER PCDOT STD 5-11
21. EXIST MATURE SAGUARO CACTI, PROTECT IN PLACE. PROVIDE PROTECTIVE FENCING (MIN. 10' OFFSET) PRIOR TO GRADING
22. 8' WIDE BASIN MAINTENANCE ACCESS RAMP FOR SKID-LOADER (PER MAINTENANCE PLAN)
23. NEW "NO PARKING THIS SIDE OF STREET" SIGN

SHEET INDEX MAP

PRELIMINARY PLAT FOR

HALLAMARK

LOTS 1 - 69, AND COMMON AREA "A" (PRIVATE STREETS & PUBLIC UTILITIES) COMMON AREAS "B-1" & "B-2" (OPEN SPACE, DRAINAGE, UTILITIES & LANDSCAPE), COMMON AREA "C-1" & "C-2" (FUNCTIONAL OPEN SPACE & DRAINAGE), AND COMMON AREA "D-1" THRU "D-11" (NATURAL OPEN SPACE)

PORTION OF THE S 1/2 OF THE SW 1/4 OF SECTION 10, TOWNSHIP 12 SOUTH, RANGE 13 EAST GILA & SALT RIVER MERIDIAN, TOWN OF ORO VALLEY, PIMA COUNTY, ARIZONA

January 9, 2026 SCALE: AS SHOWN CONTOUR INTERVAL: 1'
RELATED CASE #'S: 2500142
OV99951 [(O) 02-17]

Registered Professional Engineer (Civil) 22217 COREY THOMPSON ARIZONA U.S.A.
As-Built Signature 1-7-26

520-795-1000
rickengineering.com
3945 E FORT LOWELL RD #111
TUCSON, AZ 85712
RICK
SAN DIEGO ORANGE RIVERSIDE SACRAMENTO SAN LUIS OBISPO
SANTA CLARITA PHOENIX TUCSON LAS VEGAS DENVER

C:\RICK\Projects\T05000\5577_Hallamark_Sub\Civil\PlanSets\Preliminary Plat\5577-Pre-Plat-03-09.dwg

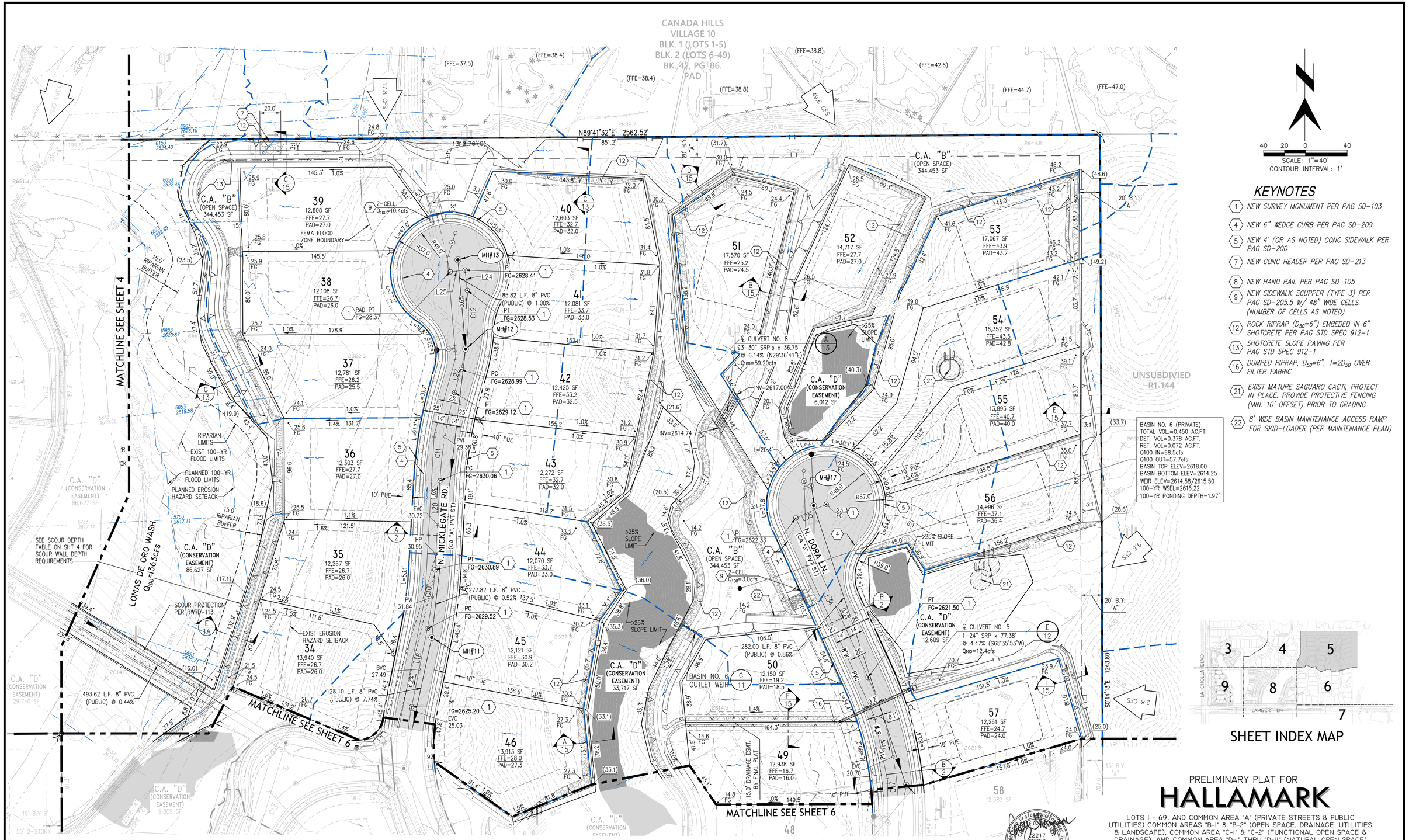

KEYNOTES

1. NEW SURVEY MONUMENT PER PAG SD-103
4. NEW 6" WEDGE CURB PER PAG SD-209
5. NEW 4' (OR AS NOTED) CONC SIDEWALK PER PAG SD-200
7. NEW CONC HEADER PER PAG SD-213
8. NEW HAND RAIL PER PAG SD-105
9. NEW SIDEWALK SCUPPER (TYPE 3) PER PAG SD-205.5 W/ 48" WIDE CELLS. (NUMBER OF CELLS AS NOTED)
12. ROCK RIPRAP (D_{50}=6") EMBEDED IN 6" SHOTCRETE PER PAG STD SPEC 912-1
13. SHOTCRETE SLOPE PAVING PER PAG STD SPEC 912-1
16. DUMPED RIPRAP, D_{50}=6", T=$2D_{50}$ OVER FILTER FABRIC
21. EXIST MATURE SAGUARO CACTI, PROTECT IN PLACE. PROVIDE PROTECTIVE FENCING (MIN. 10' OFFSET) PRIOR TO GRADING
22. 8' WIDE BASIN MAINTENANCE ACCESS RAMP FOR SKID-LOADER (PER MAINTENANCE PLAN)

FOR CENTERLINE CURVE, LINE AND SEWER MANHOLE TABLE INFORMATION SEE SHEET 2

PRELIMINARY PLAT FOR

HALLAMARK

LOTS 1 - 69, AND COMMON AREA "A" (PRIVATE STREETS & PUBLIC UTILITIES) COMMON AREAS "B-1" & "B-2" (OPEN SPACE, DRAINAGE, UTILITIES & LANDSCAPE), COMMON AREA "C-1" & "C-2" (FUNCTIONAL OPEN SPACE & DRAINAGE), AND COMMON AREA "D-1" THRU "D-11" (NATURAL OPEN SPACE)

PORTION OF THE S 1/2 OF THE SW 1/4 OF SECTION 10, TOWNSHIP 12 SOUTH, RANGE 13 EAST GILA & SALT RIVER MERIDIAN, TOWN OF ORO VALLEY, PIMA COUNTY, ARIZONA

January 9, 2026 SCALE: AS SHOWN CONTOUR INTERVAL: 1'
RELATED CASE #'S: 2500142
OV99951 [(O) 02-17]

Registered Professional Engineer (Civil) CERTIFICATE NO. 22217 COREY THOMPSON Date Signed 1-9-26 ARIZONA U.S.A.

520-795-1000
rickengineering.com
3945 E FORT LOWELL RD #111
TUCSON, AZ 85712
RICK
SAN DIEGO ORANGE RIVERSIDE SACRAMENTO SAN LUIS OBISPO
SANTA CLARITA PHOENIX TUCSON LAS VEGAS DENVER

C:\RICK\Projects\T05000\5577_Hallamark_Sub\Civil\PlanSets\Preliminary Plat\5577-Pre-Plat-03-09.dwg

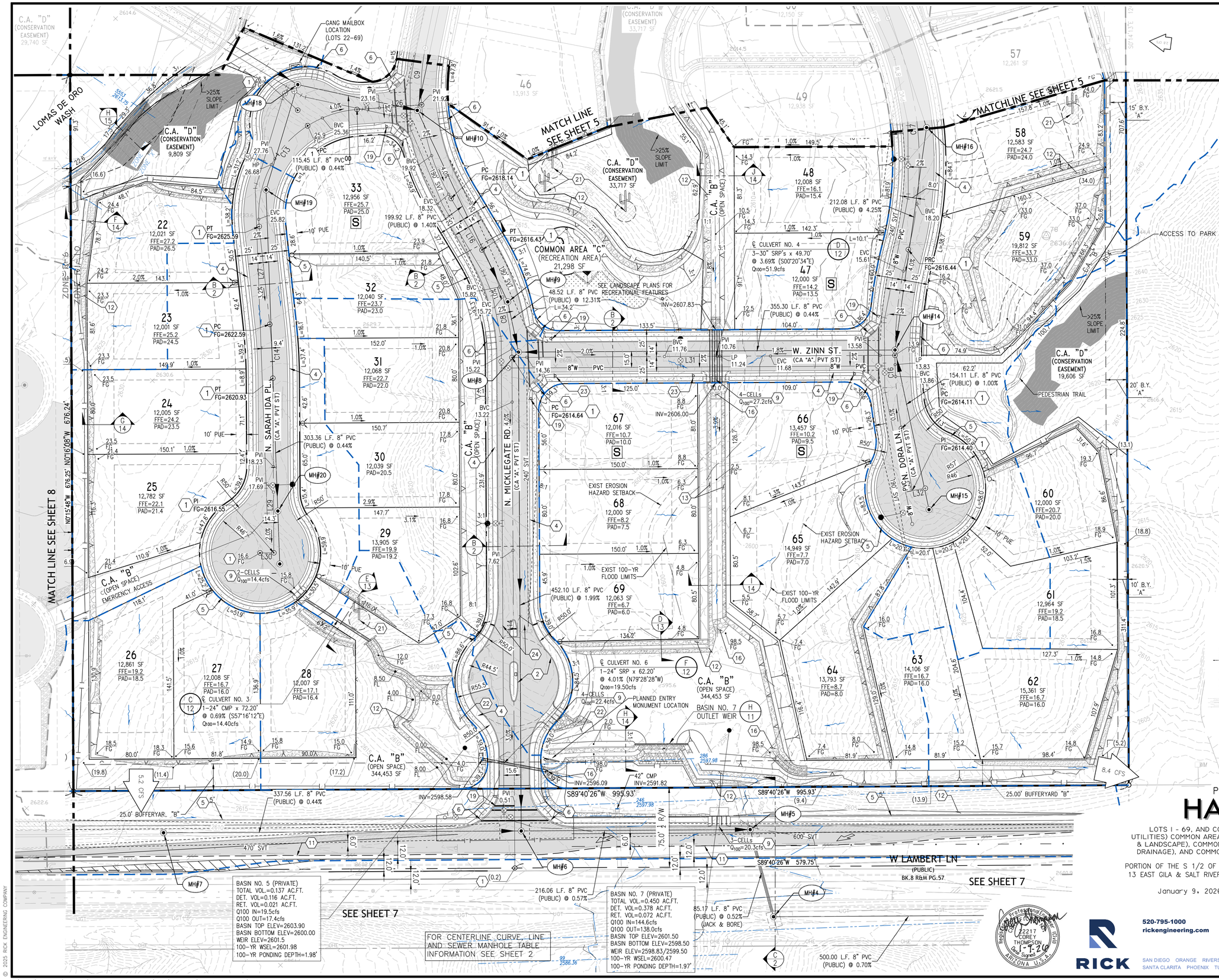

SCALE: 1"=40'
CONTOUR INTERVAL: 1'

KEYNOTES

1. NEW SURVEY MONUMENT PER PAG SD-103
2. NEW 6" VERT CURB PER PAG SD-209 TYPE 2
4. NEW 6" WEDGE CURB PER PAG SD-209
5. NEW 4' (OR AS NOTED) CONC SIDEWALK PER PAG SD-200
6. NEW CURB ACCESS RAMP PER PAG SD-207
8. NEW HAND RAIL PER PAG SD-105
9. NEW SIDEWALK SCUPPER (TYPE 3) PER PAG SD-205.5 W/ 48" WIDE CELLS. (NUMBER OF CELLS AS NOTED)
11. SAWCUT (MINIMUM 2'), TRIM, TACK AND JOIN EXISTING PAVEMENT
12. ROCK RIPRAP (D_{50}=6") EMBEDED IN 6" SHOTCRETE PER PAG STD SPEC 912-1
13. SHOTCRETE SLOPE PAVING PER PAG STD SPEC 912-1
16. DUMPED RIPRAP, D_{50}=6", T=$2D_{50}$ OVER FILTER FABRIC
18. SAWCUT EXISTING PAVEMENT AND TRENCH PATCH PER PAG SD-216 (TYPE 2)
19. NEW STOP SIGN (R1-1 w/ D3) PER PCDOT STD 5-11
21. EXIST MATURE SAGUARO CACTI, PROTECT IN PLACE. PROVIDE PROTECTIVE FENCING (MIN. 10' OFFSET) PRIOR TO GRADING
22. 8' WIDE BASIN MAINTENANCE ACCESS RAMP FOR SKID-LOADER (PER MAINTENANCE PLAN)
23. NEW "NO PARKING THIS SIDE OF STREET" SIGN

SHEET INDEX MAP

PRELIMINARY PLAT FOR

HALLAMARK

LOTS 1 - 69, AND COMMON AREA "A" (PRIVATE STREETS & PUBLIC UTILITIES) COMMON AREAS "B-1" & "B-2" (OPEN SPACE, DRAINAGE, UTILITIES & LANDSCAPE), COMMON AREA "C-1" & "C-2" (FUNCTIONAL OPEN SPACE & DRAINAGE), AND COMMON AREA "D-1" THRU "D-11" (NATURAL OPEN SPACE)

PORTION OF THE S 1/2 OF THE SW 1/4 OF SECTION 10, TOWNSHIP 12 SOUTH, RANGE 13 EAST GILA & SALT RIVER MERIDIAN, TOWN OF ORO VALLEY, PIMA COUNTY, ARIZONA

January 9, 2026 SCALE: AS SHOWN CONTOUR INTERVAL: 1'
RELATED CASE #'S: 2500142
OV99951 [(O) 02-17]

Registered Professional Engineer (Civil) CERTIFICATE NO. 22217 COREY THOMPSON Date Signed 2-1-26 ARIZONA, U.S.A.

RICK
520-795-1000
rickengineering.com
3945 E FORT LOWELL RD #111
TUCSON, AZ 85712
SAN DIEGO ORANGE RIVERSIDE SACRAMENTO SAN LUIS OBISPO
SANTA CLARITA PHOENIX TUCSON LAS VEGAS DENVER

C:\RICK\Projects\T05000\5577_Hallamark_Sub\Civil\PlanSets\Preliminary Plat\5577-Pre-Plat-03-09.dwg

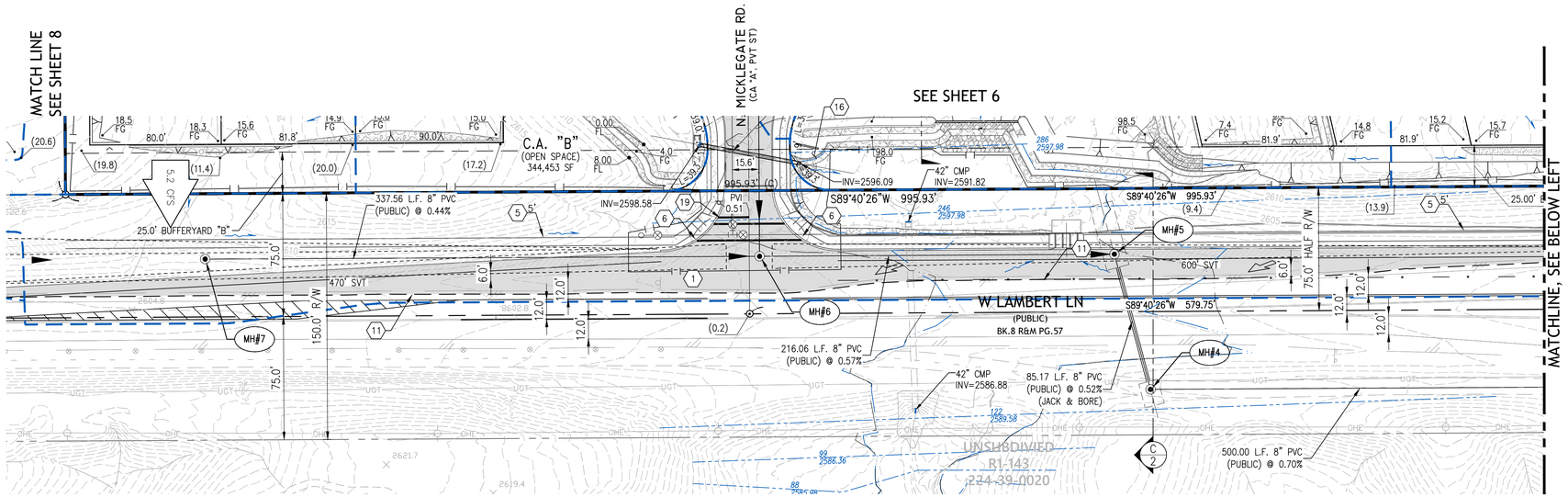

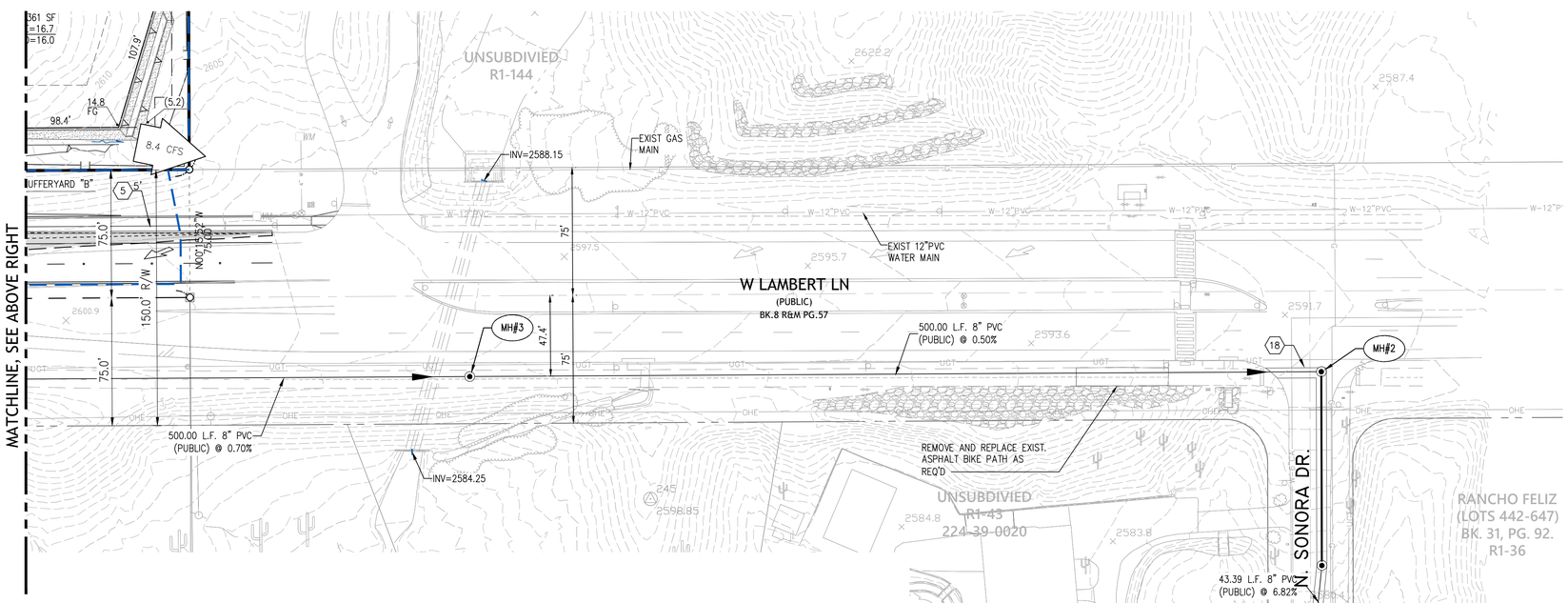

40 20 0 40
SCALE: 1"=40'
CONTOUR INTERVAL: 1'

KEYNOTES

1. NEW SURVEY MONUMENT PER PAG SD-103
2. NEW 6" VERT CURB PER PAG SD-209 TYPE 2
4. NEW 6" WEDGE CURB PER PAG SD-209
5. NEW 4' (OR AS NOTED) CONC SIDEWALK PER PAG SD-200
6. NEW CURB ACCESS RAMP PER PAG SD-207
8. NEW HAND RAIL PER PAG SD-105
9. NEW SIDEWALK SCUPPER (TYPE 3) PER PAG SD-205.5 W/ 48" WIDE CELLS. (NUMBER OF CELLS AS NOTED)
11. SAWCUT (MINIMUM 2'), TRIM, TACK AND JOIN EXISTING PAVEMENT
12. ROCK RIPRAP (D_{50}=6") EMBEDED IN 6" SHOTCRETE PER PAG STD SPEC 912-1
13. SHOTCRETE SLOPE PAVING PER PAG STD SPEC 912-1
16. DUMPED RIPRAP, D_{50}=6", T=2D_{50} OVER FILTER FABRIC
18. SAWCUT EXISTING PAVEMENT AND TRENCH PATCH PER PAG SD-216 (TYPE 2)
20. NEW CONCRETE DEPRESSED CURB (TYPE 1) PER PAG SD-209

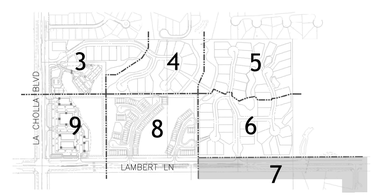

SHEET INDEX MAP

FOR CENTERLINE CURVE, LINE AND SEWER MANHOLE TABLE INFORMATION SEE SHEET 2

PRELIMINARY PLAT FOR

HALLAMARK

LOTS 1 - 69, AND COMMON AREA "A" (PRIVATE STREETS & PUBLIC UTILITIES) COMMON AREAS "B-1" & "B-2" (OPEN SPACE, DRAINAGE, UTILITIES & LANDSCAPE), COMMON AREA "C-1" & "C-2" (FUNCTIONAL OPEN SPACE & DRAINAGE), AND COMMON AREA "D-1" THRU "D-11" (NATURAL OPEN SPACE)

PORTION OF THE S 1/2 OF THE SW 1/4 OF SECTION 10, TOWNSHIP 12 SOUTH, RANGE 13 EAST GILA & SALT RIVER MERIDIAN, TOWN OF ORO VALLEY, PIMA COUNTY, ARIZONA

January 9, 2026 SCALE: AS SHOWN CONTOUR INTERVAL: 1'
RELATED CASE #'S: 2500142
OV99951 [(O) 02-17]

Registered Professional Engineer (Civil) 22217 COREY THOMPSON Date Signed 1-7-26 ARIZONA U.S.A.

RICK
520-795-1000
rickengineering.com
3945 E FORT LOWELL RD #111
TUCSON, AZ 85712
SAN DIEGO ORANGE RIVERSIDE SACRAMENTO SAN LUIS OBISPO
SANTA CLARITA PHOENIX TUCSON LAS VEGAS DENVER

C:\RICK\Projects\T05000\5577_Hallamark_Sub\Civil\PlanSets\Preliminary Plat\5577-Pre-Plat-03-09.dwg

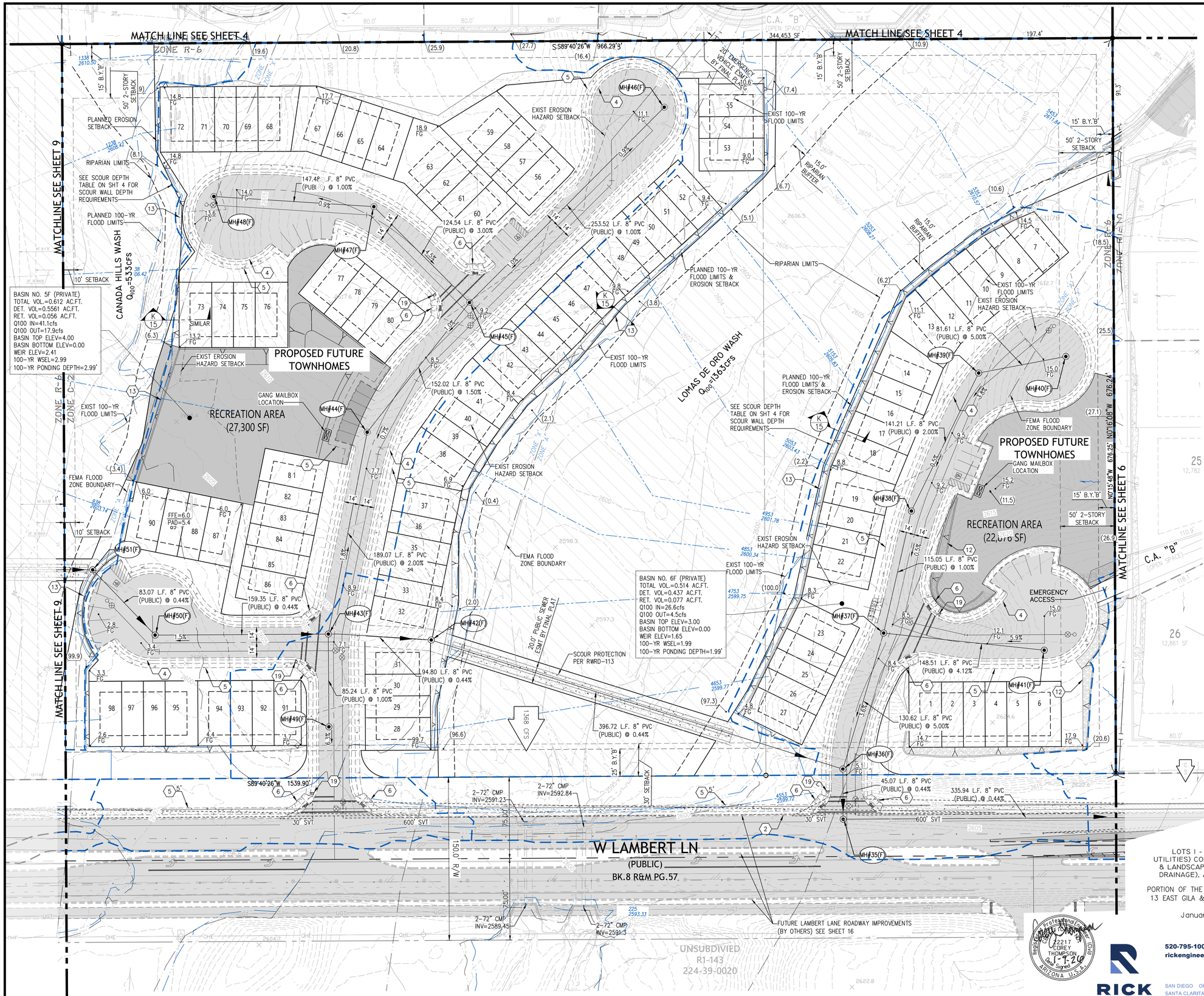

SCALE: 1"=40'
CONTOUR INTERVAL: 1'

KEYNOTES

- (2) NEW 6" VERT CURB PER PAG SD-209 TYPE 2
- (4) NEW 6" WEDGE CURB PER PAG SD-209
- (5) NEW 4' (OR AS NOTED) CONC SIDEWALK PER PAG SD-200
- (6) NEW CURB ACCESS RAMP PER PAG SD-207
- (9) NEW SIDEWALK SCUPPER (TYPE 3) PER PAG SD-205.5 W/ 48" WIDE CELLS. (NUMBER OF CELLS AS NOTED)
- (12) ROCK RIPRAP (D_{50}=6") EMBEDED IN 6" SHOTCRETE PER PAG STD SPEC 912-1
- (13) SHOTCRETE SLOPE PAVING PER PAG STD SPEC 912-1
- (16) DUMPED RIPRAP, D_{50}=6", T=$2D_{50}$ OVER FILTER FABRIC
- (19) NEW STOP SIGN (R1-1 w/ D3) PER PCDOT STD 5-11

DEVELOPMENT NOTE:
THE R-6 ZONED PARCEL IS A FUTURE DEVELOPMENT PHASE; THE FINAL DESIGN, PROPOSED USE AND LAYOUT MAY VARY, BUT WILL BE CONSISTENT WITH THE R-6 ZONING CRITERIA AND DEVELOPMENT STANDARDS, AS WILL BE DEMONSTRATED DURING THE DETAILED ENGINEERING PHASE (AND MDP AMENDMENT PHASE IF REQUIRED),

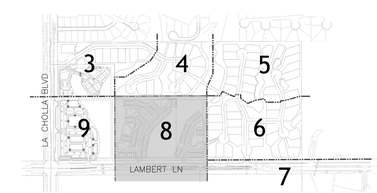

SHEET INDEX MAP

PRELIMINARY PLAT FOR

HALLAMARK

LOTS 1 - 69, AND COMMON AREA "A" (PRIVATE STREETS & PUBLIC UTILITIES) COMMON AREAS "B-1" & "B-2" (OPEN SPACE, DRAINAGE, UTILITIES & LANDSCAPE), COMMON AREA "C-1" & "C-2" (FUNCTIONAL OPEN SPACE & DRAINAGE), AND COMMON AREA "D-1" THRU "D-11" (NATURAL OPEN SPACE)

PORTION OF THE S 1/2 OF THE SW 1/4 OF SECTION 10, TOWNSHIP 12 SOUTH, RANGE 13 EAST GILA & SALT RIVER MERIDIAN, TOWN OF ORO VALLEY, PIMA COUNTY, ARIZONA

January 9, 2026 SCALE: AS SHOWN CONTOUR INTERVAL: 1'
RELATED CASE #'S: 2500142
OV99951 [(O) 02-17]

Registered Professional Engineer (Civil) CERTIFICATE NO. 22217 COREY THOMPSON 1-9-26 Date Signed ARIZONA U.S.A.

520-795-1000
rickengineering.com
3945 E FORT LOWELL RD #111
TUCSON, AZ 85712
RICK
SAN DIEGO ORANGE RIVERSIDE SACRAMENTO SAN LUIS OBISPO
SANTA CLARITA PHOENIX TUCSON LAS VEGAS DENVER

C:\RICK\Projects\T05000\5577_Hallamark_Sub\Civil\PlanSets\Preliminary Plat\5577-Pre-Plat-03-09.dwg

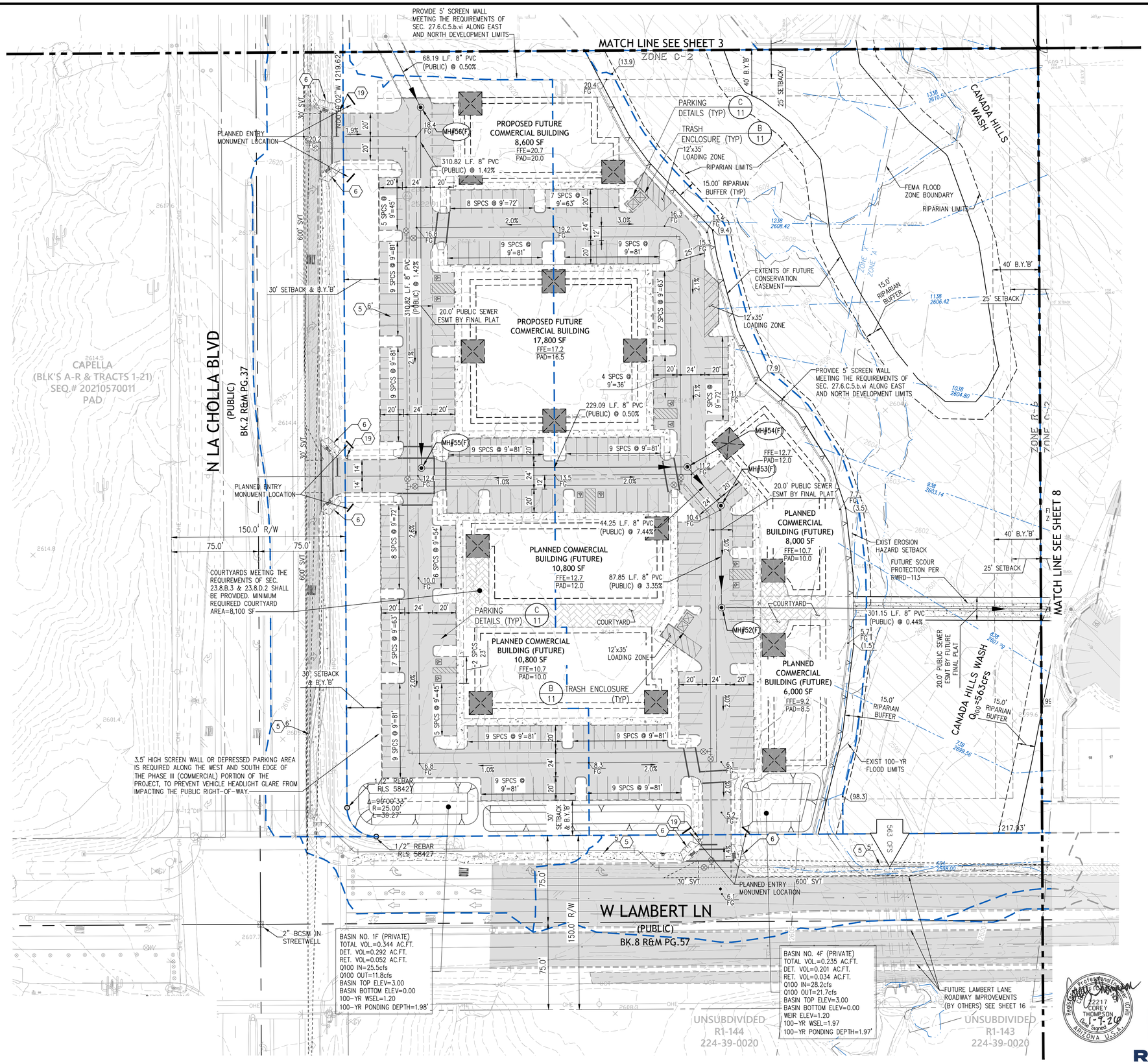

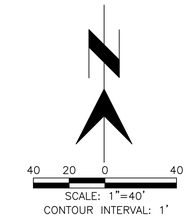

KEYNOTES

- (2) NEW 6" VERT CURB PER PAG SD-209 TYPE 2
- (4) NEW 6" WEDGE CURB PER PAG SD-209
- (5) NEW 4' (OR AS NOTED) CONC SIDEWALK PER PAG SD-200
- (6) NEW CURB ACCESS RAMP PER PAG SD-207
- (9) NEW SIDEWALK SCUPPER (TYPE 3) PER PAG SD-205.5 W/ 48" WIDE CELLS. (NUMBER OF CELLS AS NOTED)
- (12) ROCK RIPRAP (D_{50}=6") EMBEDED IN 6" SHOTCRETE PER PAG STD SPEC 912-1
- (13) SHOTCRETE SLOPE PAVING PER PAG STD SPEC 912-1
- (16) DUMPED RIPRAP, D_{50}=6", T=2D_{50} OVER FILTER FABRIC
- (19) NEW STOP SIGN (R1-1 w/ D3) PER PCDOT STD 5-11

DEVELOPMENT NOTE:
THE C-1 ZONED PARCEL IS A FUTURE DEVELOPMENT PHASE; THE FINAL DESIGN, PROPOSED USE AND LAYOUT MAY VARY, BUT WILL BE CONSISTENT WITH THE C-1 ZONING CRITERIA AND DEVELOPMENT STANDARDS, AS WILL BE DEMONSTRATED DURING THE DETAILED ENGINEERING PHASE (AND MDP AMENDMENT PHASE IF REQUIRED),

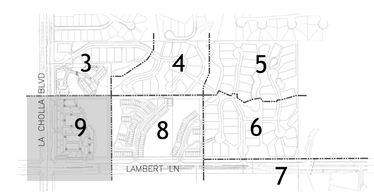

SHEET INDEX MAP

PRELIMINARY PLAT FOR

HALLAMARK

LOTS 1 - 69, AND COMMON AREA "A" (PRIVATE STREETS & PUBLIC UTILITIES) COMMON AREAS "B-1" & "B-2" (OPEN SPACE, DRAINAGE, UTILITIES & LANDSCAPE), COMMON AREA "C-1" & "C-2" (FUNCTIONAL OPEN SPACE & DRAINAGE), AND COMMON AREA "D-1" THRU "D-11" (NATURAL OPEN SPACE)

PORTION OF THE S 1/2 OF THE SW 1/4 OF SECTION 10, TOWNSHIP 12 SOUTH, RANGE 13 EAST GILA & SALT RIVER MERIDIAN, TOWN OF ORO VALLEY, PIMA COUNTY, ARIZONA

January 9, 2026 SCALE: AS SHOWN CONTOUR INTERVAL: 1'
RELATED CASE #'S: 2500142
OV99951 [(O) 02-17]

Registered Professional Engineer (Civil) COREY THOMPSON 22217 ARIZONA U.S.A. Date Signed 1-9-26

520-795-1000
rickengineering.com
3945 E FORT LOWELL RD #111
TUCSON, AZ 85712
RICK
SAN DIEGO ORANGE RIVERSIDE SACRAMENTO SAN LUIS OBISPO
SANTA CLARITA PHOENIX TUCSON LAS VEGAS DENVER

C:\RICK\Projects\T05000\5577_Hallamark_Sub\Civil\PlanSets\Preliminary Plat\5577-Pre-Plat-03-09.dwg

PHASE IV SUMMARY

40 PLANNED APARTMENTS
SITE AREA: 4.65 ACRES
EXISTING ZONING: R-6 MULTI-FAMILY
GROSS DENSITY: 8.6 RAC
MAX. BLDG HT: 25' (2 STORIES)
REQ'D CONSERVATION ESMT: 641,35.40 SF

LANDSCAPE BUFFER REQMT:
NORTH & EAST: BUFFERYARD "B"
WEST: 25' BUFFERYARD "B"
SOUTH: N/A

SITE SETBACK REQMTS:
FRONT: 30'
SIDE & REAR:
10' WHERE NEXT TO C-2 ZONE
30' FOR SINGLE STORY
40' FOR TWO-STORY
50' TO NOT REQUIRE PZC CONSIDERATION & TC APPROVAL OF TWO-STORY

REQUIRED PARKING:
1 PER 4 UNITS GUEST PRKG + 1.75 PER 2 BEDROOM UNIT ((0.25x40)+(1.75x40)): 80 SPACES REQUIRED
PROVIDED PARKING: 82 SPACES

ACCESSIBLE PARKING:
SPACES REQUIRED: 4 (1 VAN ACCESSIBLE)
PROVIDED SPACES: 4 (2 VAN ACCESSIBLE)

PARKING FACILITY SCREENING
ALL PARKING FACILITIES SHALL BE SCREENED PER 27.6.C.5.b.xi

REQUIRED BICYCLE PARKING:
1 PER 20 PARKING SPACES (82 SPACES/20):
4 BICYCLE SPACES REQUIRED
(NOTE: 1 SPACE (10% MIN.) MUST BE TYPE II FOR APARTMENTS)
PROVIDED BICYCLE PARKING: 6 SPACES

REQUIRED RECREATIONAL AREA:
400 SF PER UNIT (400x40): 16,000 SF
PROVIDED RECREATION AREA: 16,000 SF

MULTI-FAMILY BUILDING RECREATION:
A PRIVATE OUTDOOR LIVING SPACE SHALL BE PROVIDED ADJOINING EACH DWELLING UNIT, EQUAL TO A MINIMUM OF TWENTY PERCENT (20%) OF THE GROSS SIZE OF THE DWELLING UNIT, EXCEPT THAT DWELLING UNITS ABOVE THE FIRST STORY SHALL PROVIDE SUCH SPACE EQUAL TO TEN PERCENT (10%) OF THE GROSS SIZE OF THE DWELLING UNIT. OUTDOOR LIVING SPACE ON GROUND LEVEL MAY BE INCLUDED IN THE OPEN SPACE REQUIREMENT.

PHASE III SUMMARY

62,000 SF COMMERCIAL
SITE AREA: 9.30 ACRES
EXISTING ZONING: C-2 COMMERCIAL DISTRICT
REQ'D CONSERVATION ESMT: 120,823.21 SF

LANDSCAPE BUFFER REQMT:
WEST & SOUTH: 30' BUFFERYARD "B"
NORTH & EAST: BUFFERYARD "B"

SETBACK REQMTS:
FRONT: 30'
SIDE: 25'
REAR: 25'

FLOOR AREA RATIO:
ALLOWABLE FAR: 40%
PLANNED FAR: 15%

OPEN SPACE:
MINIMUM REQUIRED: 20% (1.86 AC)
PROVIDED OPEN SPACE: 30% (2.77 AC)

REQUIRED PARKING:
4 SPACES PER 1000 SF FLOOR AREA (62,000 SF/250):
248 SPACES REQUIRED
PROVIDED PARKING: 248 SPACES

ACCESSIBLE PARKING:
SPACES REQUIRED: 7 (2 VAN ACCESSIBLE)
PROVIDED SPACES: 10 (4 VAN ACCESSIBLE)

PARKING FACILITY SCREENING
ALL PARKING FACILITIES SHALL BE SCREENED PER 27.6.C.5.b.xi

REQUIRED BICYCLE PARKING:
1 PER 20 PARKING SPACES=248/20=
13 BICYCLE SPACES REQUIRED
PROVIDED BICYCLE PARKING: 16

REQUIRED LOADING ZONES (TABLE 27-17):
GROSS FLOOR AREA=62,000 SF
LOADING SPACES REQUIRED: 3
PROVIDED LOADING SPACES: 3

REQUIRED COURTYARDS (23.8.B.3 & 23.8.D.2)
REQUIRED 2% NET AREA=8100 SF
PROVIDED: 8100 SF

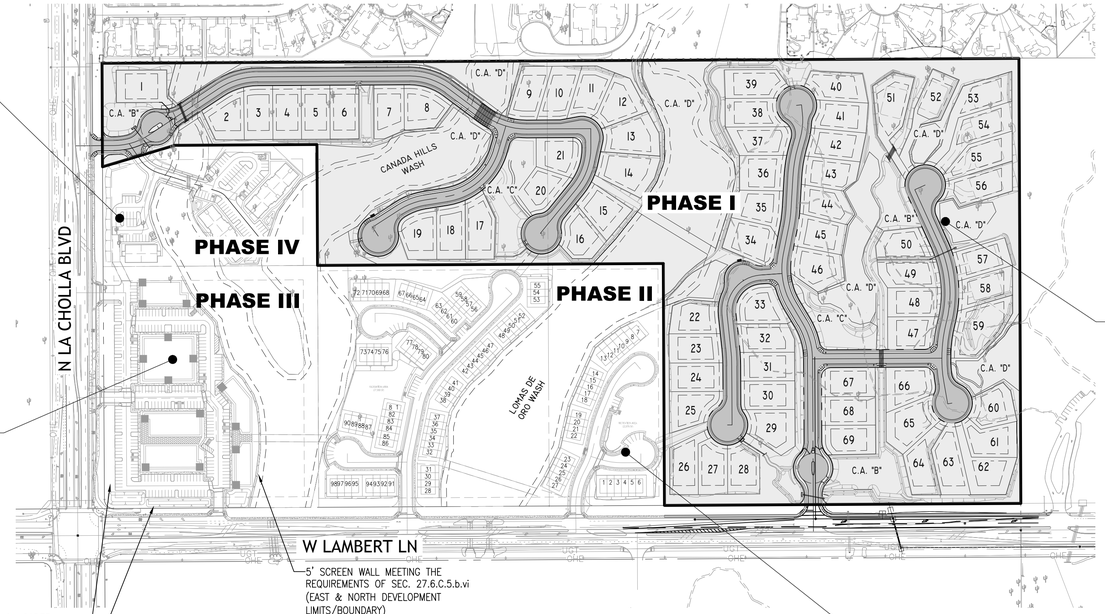

3.5' HIGH SCREEN WALL OR DEPRESSED PARKING AREA PER SEC. 27.6.C.5.b.xi (SOUTH & WEST BOUNDARY)

5' SCREEN WALL MEETING THE REQUIREMENTS OF SEC. 27.6.C.5.b.vi (EAST & NORTH DEVELOPMENT LIMITS/BOUNDARY)

PHASE I SUMMARY

69 SINGLE FAMILY RESIDENCE
SITE AREA: 44.36 ACRES
EXISTING ZONING: R-10 SINGLE FAMILY RESIDENTIAL
GROSS DENSITY: 1.56 RAC
BLDG HT: 25' (2 STORIES)
REQ'D CONSERVATION ESMT: 332,772.93 SF

SETBACK REQMTS:
FRONT: 25'
SIDE: 10'
REAR: 25'

LANDSCAPE BUFFER REQMT:
NORTH, EAST: BUFFERYARD "A"
WEST (ADJ TO LA CHOLLA BL): 25' BUFFERYARD "B"
SOUTH (ADJ TO LAMBER LN): 25' BUFFERYARD "B"

REQUIRED PARKING:
2 PER UNIT (2x69): 138 SPACES
PROVIDED PARKING: 138 SPACES (GARAGE)

REQUIRED GUEST PARKING:
2 PER UNIT (2x69): 138 SPACES (GARAGE)
PROVIDED GUEST PARKING: 138 SPACES (DRIVEWAY)

RECREATION AREA PARKING:
1 PER EVERY 20 DWELLING UNITS (69 DU's/20):
4 SPACES REQUIRED
PROVIDED SPACES: 4

REQUIRED RECREATIONAL AREA:
512 SF PER UNIT (512x69): 35,328 SF
PROVIDED RECREATION AREA: 50,138 SF

200 100 0 200
GRAPHIC SCALE: 1"=200'

MASTER DEVELOPMENT PLAN

1"=200'

DEVELOPMENT PLAN PHASING NOTE:

THIS MASTER DEVELOPMENT PLAN PROVIDES FOR THE GENERAL LAYOUT OF THE ENTIRE PROPERTY COMPRISING OF 4 PHASES. PLAN SHEETS ALSO INCLUDE A SPECIFIC DEVELOPMENT PLAN AND PRELIMINARY PLAT FOR PHASE 1. ALL OTHER PHASES WILL REQUIRE SPECIFIC DEVELOPMENT PLANS AND/OR PLATS, LANDSCAPE PLANS, NATIVE PLANT PRESERVATION PLANS, SOILS REPORTS, DRAINAGE REPORTS, AND RECREATION AREA PLANS (AS NEEDED), WITH ALL REQUIRED TOWN CODE DETAILS. IN THE EVENT THAT FUTURE PLANS AND REPORTS REQUIRE REDESIGN, THE MASTER DEVELOPMENT PLANS SHALL BE MODIFIED ACCORDINGLY.

PHASE II SUMMARY

98 PLANNED TOWNHOUSE UNITS
SITE AREA: 15.00 ACRES
EXISTING ZONING: R-6 MULTI-FAMILY
GROSS DENSITY: 6.5 RAC
BLDG HT: 25' (2 STORIES)
REQ'D CONSERVATION ESMT: 229,846.12 SF

LANDSCAPE BUFFER REQMT:
NORTH & EAST: BUFFERYARD "B"
SOUTH: 25' BUFFERYARD "B"
WEST: N/A

SITE SETBACK REQMTS:
FRONT: 30'
SIDE & REAR:
10' WHERE NEXT TO C-2 ZONE
30' FOR SINGLE STORY
40' FOR TWO-STORY
50' TO NOT REQUIRE PZC CONSIDERATION & TC APPROVAL OF TWO-STORY

REQUIRED PARKING:
2 PER UNIT (2x98): 196 SPACES
PROVIDED PARKING: 196 SPACES (GARAGE)

REQUIRED GUEST PARKING:
1 PER 4 UNITS (0.25x98): 24.5 SPACES
PROVIDED GUEST PARKING: 25 SPACES

ACCESSIBLE PARKING:
SPACES REQUIRED: 2 (1 VAN ACCESSIBLE)
PROVIDED SPACES: 3 (1 VAN ACCESSIBLE)

RECREATION AREA PARKING:
1 PER EVERY 20 DWELLING UNITS (98 DU's/20):
5 SPACES REQUIRED
PROVIDED RECREATION PARKING: 5 SPACES

REQUIRED RECREATIONAL AREA:
512 SF PER UNIT (512x98): 50,176 SF
PROVIDED RECREATION AREA: 50,176 SF

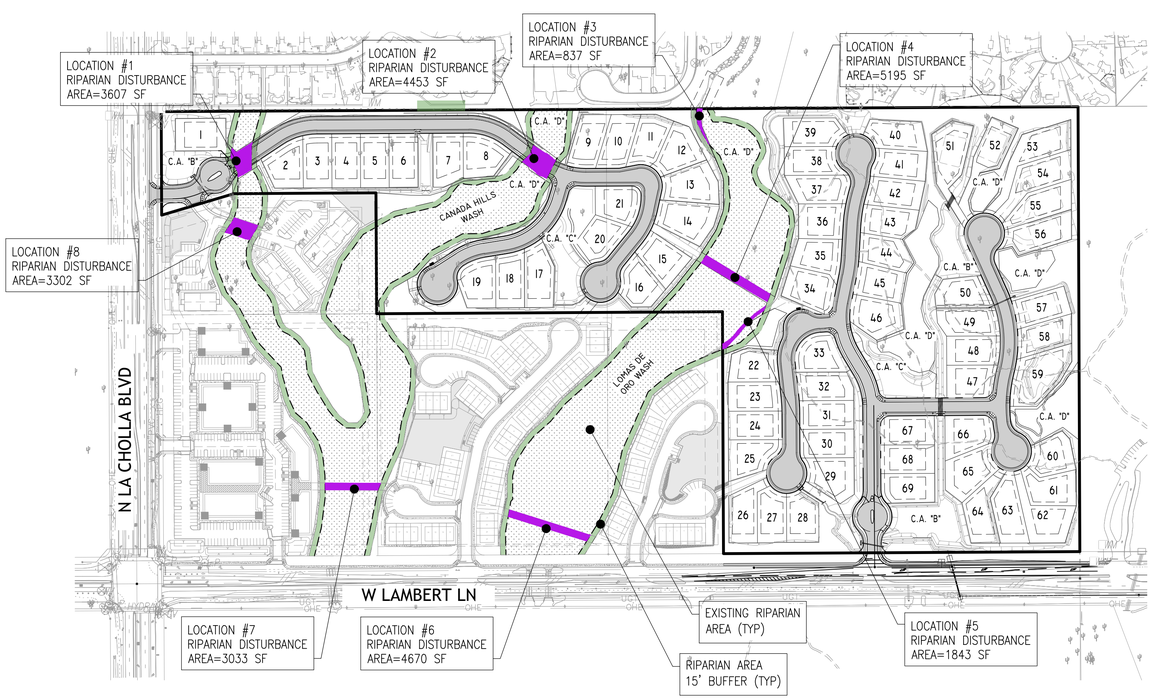

RIPARIAN DISTURBANCE SUMMARY

LOCATION ID	DISTURBANCE AREA (SF)
1	3607
2	4453
3	837
4	5195
5	1843
6	4670
7	3033
8	3302
TOTAL	26940

LEGEND

RIPARIAN AREA
15' RIPARIAN BUFFER
RIPARIAN DISTURBANCE

200 100 0 200
GRAPHIC SCALE: 1"=200'

RIPARIAN DATA TABULATION:

TOTAL RIPARIAN AREA:	538,825.17 (12.370 AC)
ALLOWABLE DISTURBANCE (5%):	26,941.26 SF (0.619 AC)
PLANNED RIPARIAN DISTURBANCE:	26,940 SF (0.619 AC)
EXISTING 15' RIPARIAN BUFFER AREA:	125,667.96 (2.885 AC)
TOTAL REQUIRED RIPARIAN CONSERVATION EASEMENT (RIPARIAN + BUFFER):	664,493.13 SF (15.255 AC)
PHASE I (SINGLE-FAMILY) PLANNED RIPARIAN CONSERVATION EASEMENT (CA's D1-D6):	250,059.11 SF (5.741 AC)
PHASES II-IV PLANNED RIPARIAN CONSERVATION EASEMENT:	414805.20 SF (9.523 AC)
TOTAL PLANNED RIPARIAN CONSERVATION EASEMENT:	664,864.26 SF (15.263 AC)

RIPARIAN AREA IMPACT SUMMARY

1"=200'

Registered Professional Engineer (CIVIL)
CERTIFICATE NO. 22217
COREY THOMPSON
ARIZONA U.S.A.
Date Signed 1-7-26

PRELIMINARY PLAT FOR

HALLAMARK

LOTS 1 - 69, AND COMMON AREA "A" (PRIVATE STREETS & PUBLIC UTILITIES) COMMON AREAS "B-1" & "B-2" (OPEN SPACE, DRAINAGE, UTILITIES & LANDSCAPE), COMMON AREA "C-1" & "C-2" (FUNCTIONAL OPEN SPACE & DRAINAGE), AND COMMON AREA "D-1" THRU "D-11" (NATURAL OPEN SPACE)

PORTION OF THE S 1/2 OF THE SW 1/4 OF SECTION 10, TOWNSHIP 12 SOUTH, RANGE 13 EAST GILA & SALT RIVER MERIDIAN, TOWN OF ORO VALLEY, PIMA COUNTY, ARIZONA

January 9, 2026 SCALE: AS SHOWN CONTOUR INTERVAL: 1'
RELATED CASE #'S: 2500142
OV99951 [(D) 02-17]

520-795-1000
rickengineering.com
3945 E FORT LOWELL RD #111
TUCSON, AZ 85712
RICK
SAN DIEGO ORANGE RIVERSIDE SACRAMENTO SAN LUIS OBISPO
SANTA CLARITA PHOENIX TUCSON LAS VEGAS DENVER

C:\RICK\Projects\T05000\5577_Hallamark_Sub\Civil\PlanSets\Preliminary Plat\5577-Pre-Plat-10 & 16.dwg

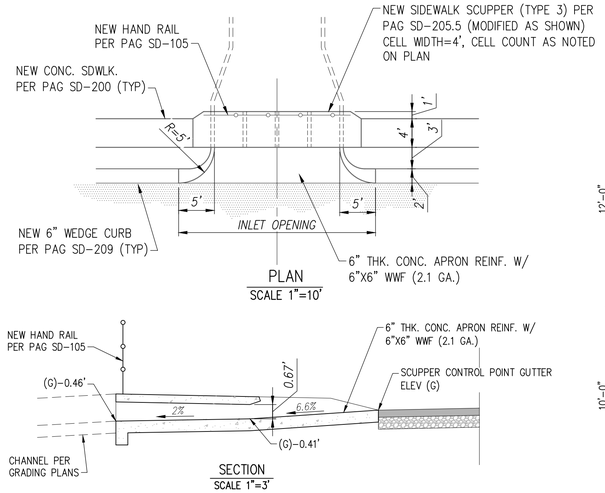

A TYPICAL SIDEWALK SCUPPER

AS NOTED

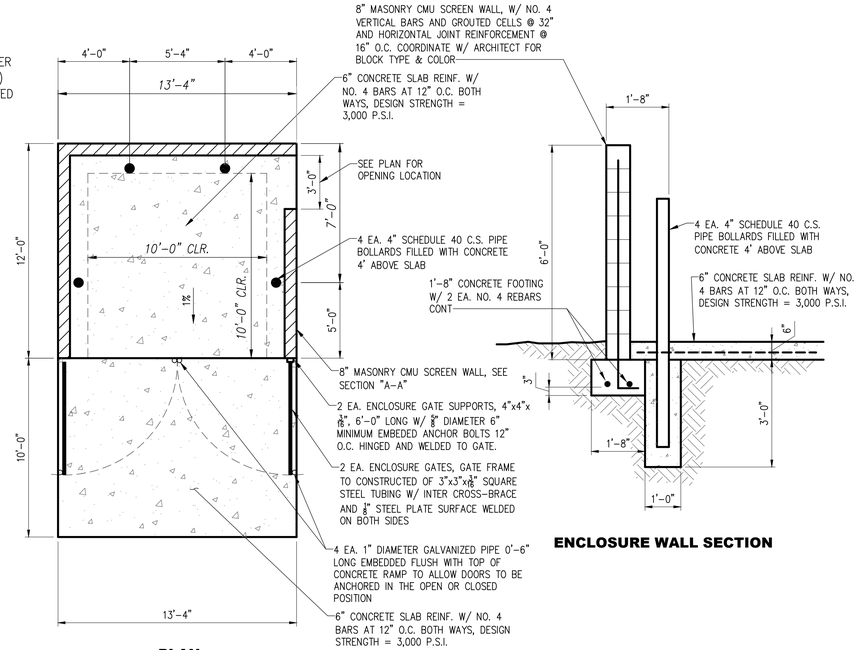

B TRASH ENCLOSURE DETAIL

PHASES III & IV ONLY NTS

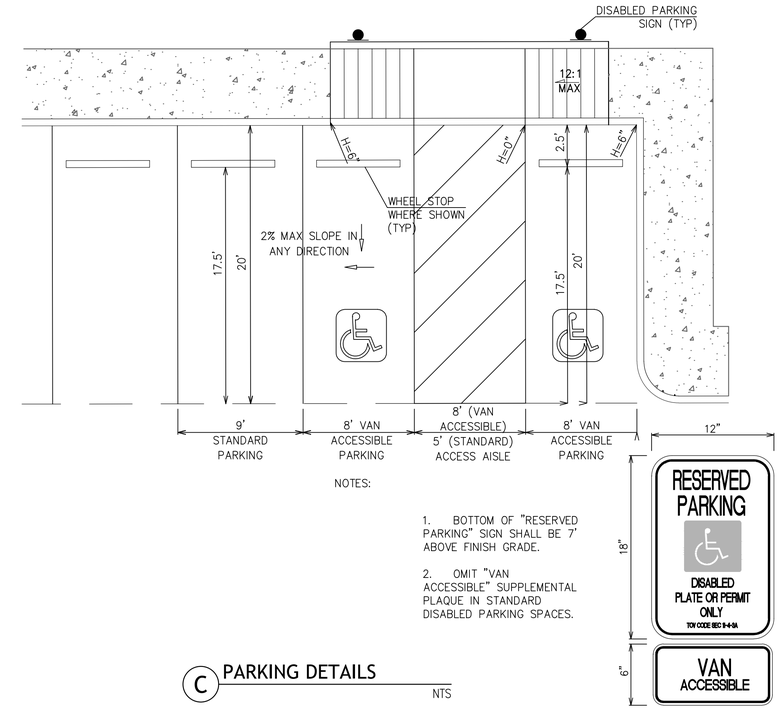

NOTES:

1. BOTTOM OF "RESERVED PARKING" SIGN SHALL BE 7' ABOVE FINISH GRADE.

2. OMIT "VAN ACCESSIBLE" SUPPLEMENTAL PLAQUE IN STANDARD DISABLED PARKING SPACES.

C PARKING DETAILS

NTS

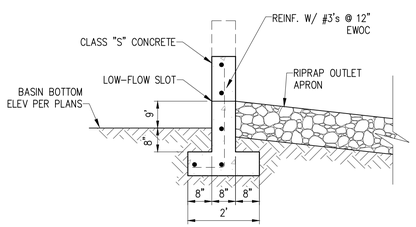

D TYPICAL WEIR SECTION

1"=2'

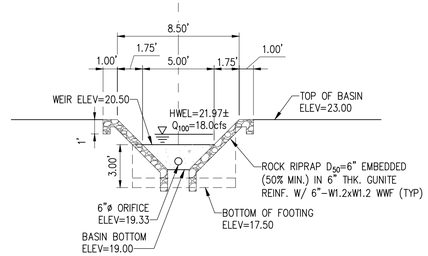

E BASIN NO. 3 OUTLET WEIR ELEVATION

1"=5'

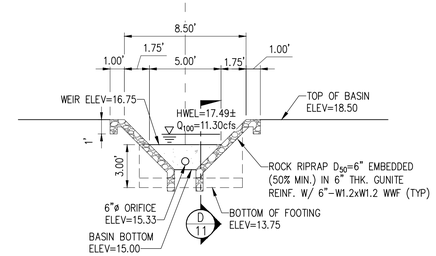

F BASIN NO. 4 OUTLET WEIR ELEVATION

1"=5'

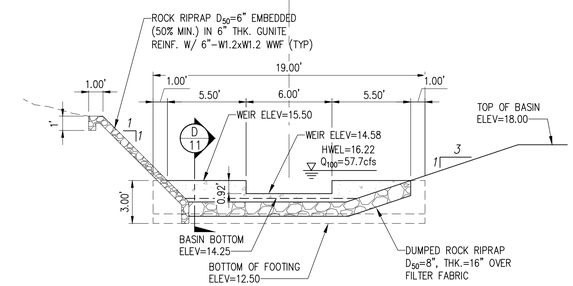

G BASIN NO. 6 OUTLET WEIR ELEVATION

1"=5'

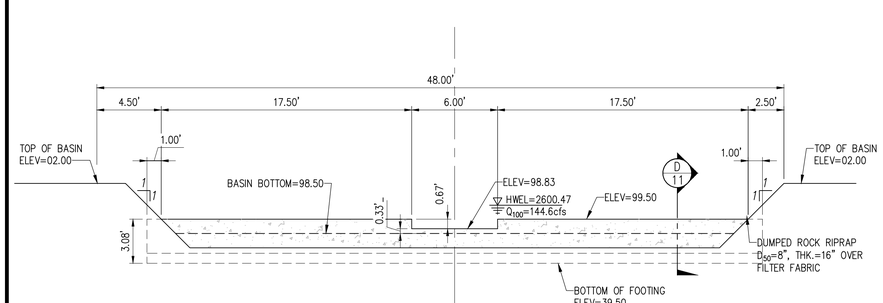

H BASIN NO. 7 OUTLET WEIR ELEVATION

1"=5'

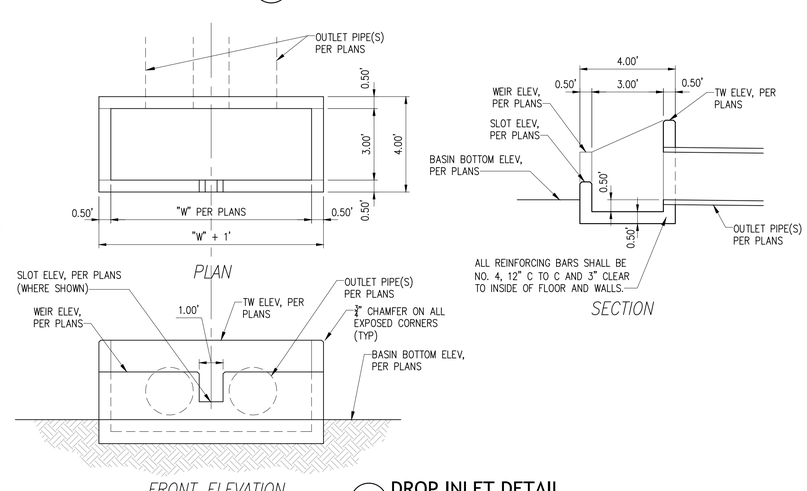

I DROP INLET DETAIL

1"=3'

SLOPE PROTECTION COLOR REQUIREMENT: ALL RIPRAP (GROUTED, DUMPED AND/OR HAND-PLACED) AND SHOTCRETE SLOPE STABILIZATION SHALL BE OF NATURAL COLORS OF THE NATIVE ROCK AND SOILS OF THE SITE. RIPRAP SHALL TO BE OF "CORONADO BROWN" VARIETY OR APPVD EQUAL. ALL SHOTCRETE SHALL BE OF A CONSISTANT "DESERT TAN" COLOR ACHIEVED BY THE USE OF INTEGRAL PIGMENT ADMIXTURES.

Professional Engineer (Civil) CERTIFICATE NO. 22217 COREY THOMPSON Date Signed 1-7-26 ARIZONA, U.S.A.

PRELIMINARY PLAT FOR

HALLAMARK

LOTS 1 - 69, AND COMMON AREA "A" (PRIVATE STREETS & PUBLIC UTILITIES) COMMON AREAS "B-1" & "B-2" (OPEN SPACE, DRAINAGE, UTILITIES & LANDSCAPE), COMMON AREA "C-1" & "C-2" (FUNCTIONAL OPEN SPACE & DRAINAGE), AND COMMON AREA "D-1" THRU "D-11" (NATURAL OPEN SPACE)

PORTION OF THE S 1/2 OF THE SW 1/4 OF SECTION 10, TOWNSHIP 12 SOUTH, RANGE 13 EAST GILA & SALT RIVER MERIDIAN, TOWN OF ORO VALLEY, PIMA COUNTY, ARIZONA

January 9, 2026 SCALE: AS SHOWN CONTOUR INTERVAL: 1'

RELATED CASE #'S: 2500142

OV99951 [(O) 02-17]

RICK

520-795-1000
rickengineering.com

3945 E FORT LOWELL RD #111
TUCSON, AZ 85712

SAN DIEGO ORANGE RIVERSIDE SACRAMENTO SAN LUIS OBISPO
SANTA CLARITA PHOENIX TUCSON LAS VEGAS DENVER

C:\RICK\Projects\T05000\5577_Hallamark_Sub\Civil\PlanSets\Preliminary Plat\5577-Pre-Plat-DTLS-11-14.dwg

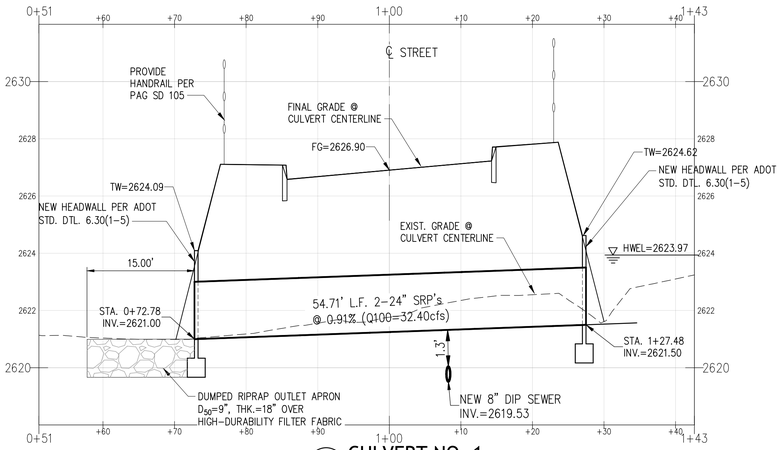

A CULVERT NO. 1
1"=10'(H), 1"=2.5'(V)

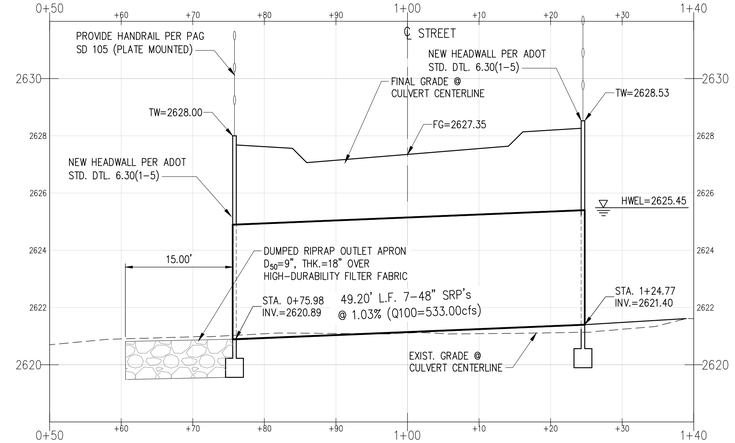

B CULVERT NO. 2
1"=10'(H), 1"=2.5'(V)

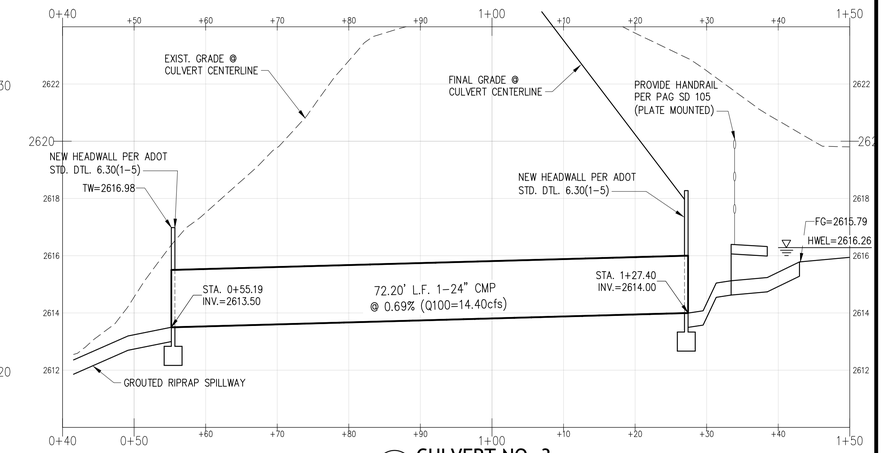

C CULVERT NO. 3
1"=10'(H), 1"=2.5'(V)

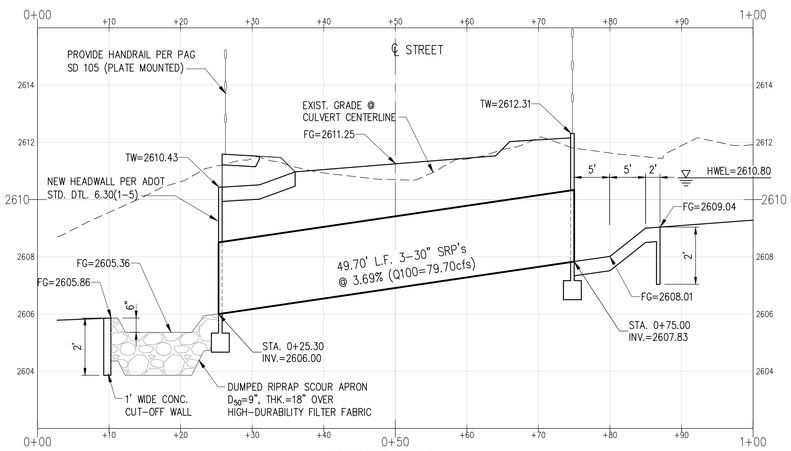

D CULVERT NO. 4
1"=10'(H), 1"=2.5'(V)

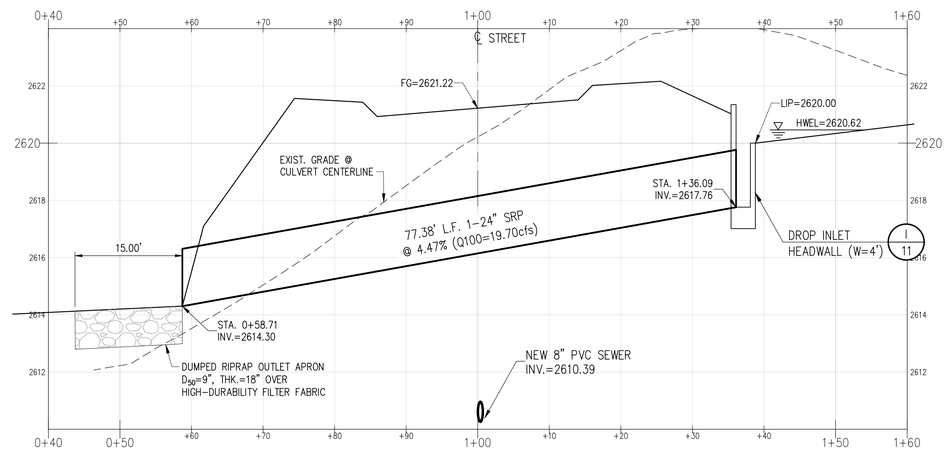

E CULVERT NO. 5
1"=10'(H), 1"=2.5'(V)

SLOPE PROTECTION COLOR REQUIREMENT: ALL RIPRAP (GROUTED, DUMPED AND/OR HAND-PLACED) AND SHOTCRETE SLOPE STABILIZATION SHALL BE OF NATURAL COLORS OF THE NATIVE ROCK AND SOILS OF THE SITE. RIPRAP SHALL TO BE OF "CORONADO BROWN" VARIETY OR APPVD EQUAL. ALL SHOTCRETE SHALL BE OF A CONSISTANT "DESERT TAN" COLOR ACHIEVED BY THE USE OF INTEGRAL PIGMENT ADMIXTURES.

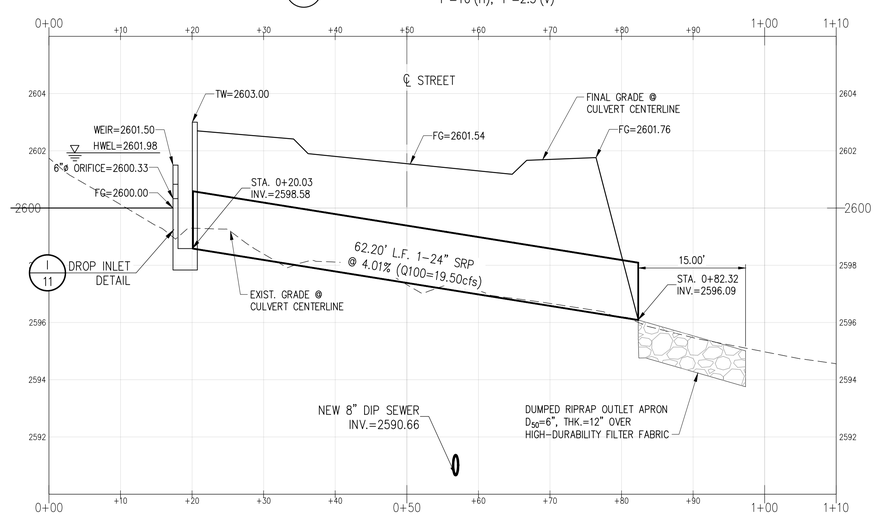

F CULVERT NO. 6
1"=10'(H), 1"=2.5'(V)

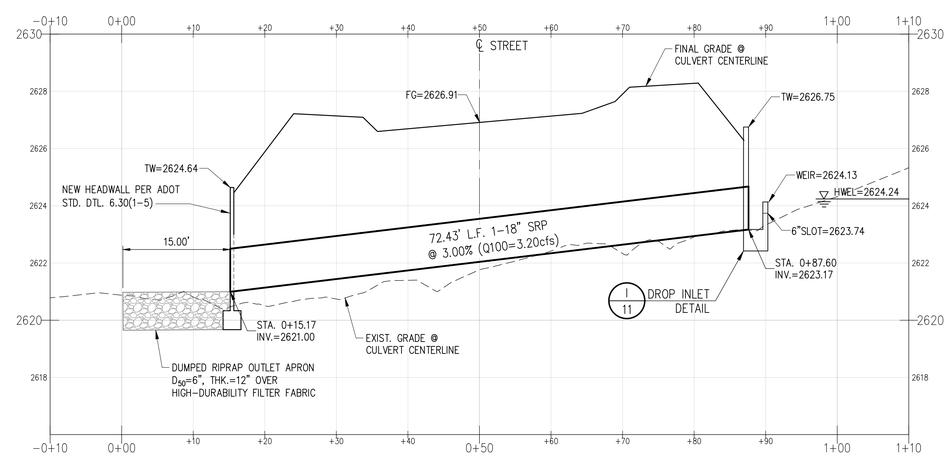

G CULVERT NO. 7
1"=10'(H), 1"=2.5'(V)

PRELIMINARY PLAT FOR

HALLAMARK

LOTS 1 - 69, AND COMMON AREA "A" (PRIVATE STREETS & PUBLIC UTILITIES) COMMON AREAS "B-1" & "B-2" (OPEN SPACE, DRAINAGE, UTILITIES & LANDSCAPE), COMMON AREA "C-1" & "C-2" (FUNCTIONAL OPEN SPACE & DRAINAGE), AND COMMON AREA "D-1" THRU "D-11" (NATURAL OPEN SPACE)

PORTION OF THE S 1/2 OF THE SW 1/4 OF SECTION 10, TOWNSHIP 12 SOUTH, RANGE 13 EAST GILA & SALT RIVER MERIDIAN, TOWN OF ORO VALLEY, PIMA COUNTY, ARIZONA

January 9, 2026 SCALE: AS SHOWN CONTOUR INTERVAL: 1'
RELATED CASE #'S: 2500142
OV99951 [(O) 02-17]

520-795-1000
rickengineering.com
3945 E FORT LOWELL RD #111
TUCSON, AZ 85712
RICK
SAN DIEGO ORANGE RIVERSIDE SACRAMENTO SAN LUIS OBISPO
SANTA CLARITA PHOENIX TUCSON LAS VEGAS DENVER

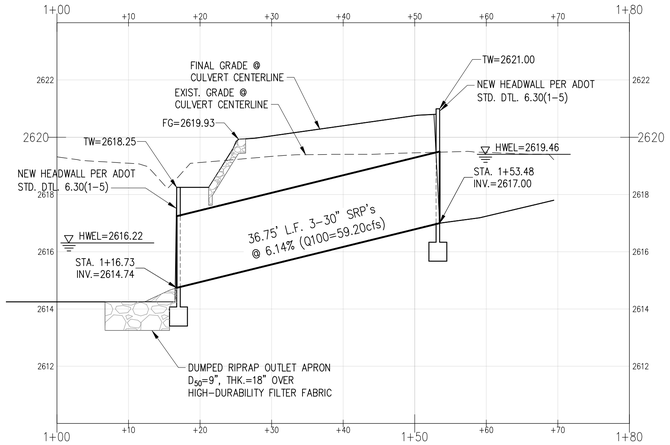

A CULVERT NO. 8
1"=10'(H), 1"=2.5'(V)

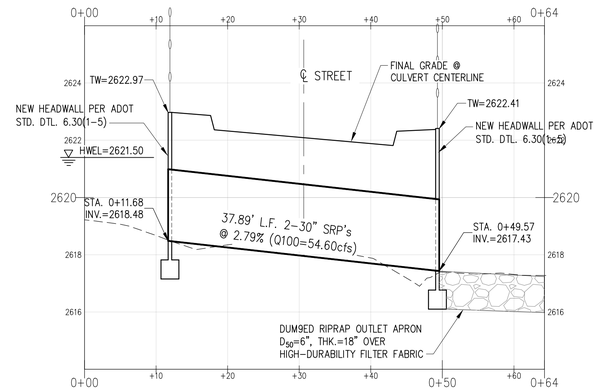

B CULVERT NO. 9 (FUTURE)
CULVERT IS TO BE BUILT AS PART OF PHASE IV
1"=10'(H), 1"=2.5'(V)

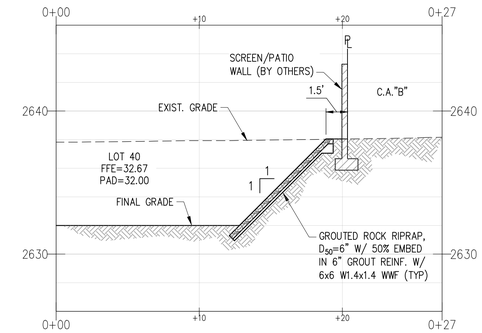

C SECTION
1"=5'

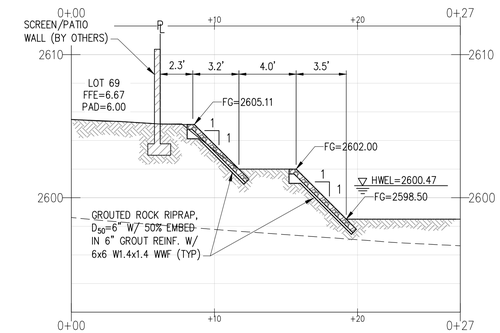

D SECTION
1"=5'

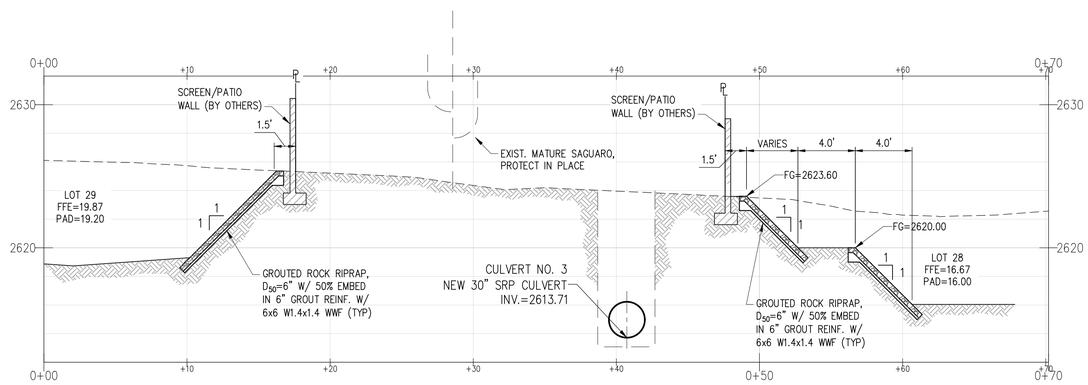

E SECTION
1"=5'

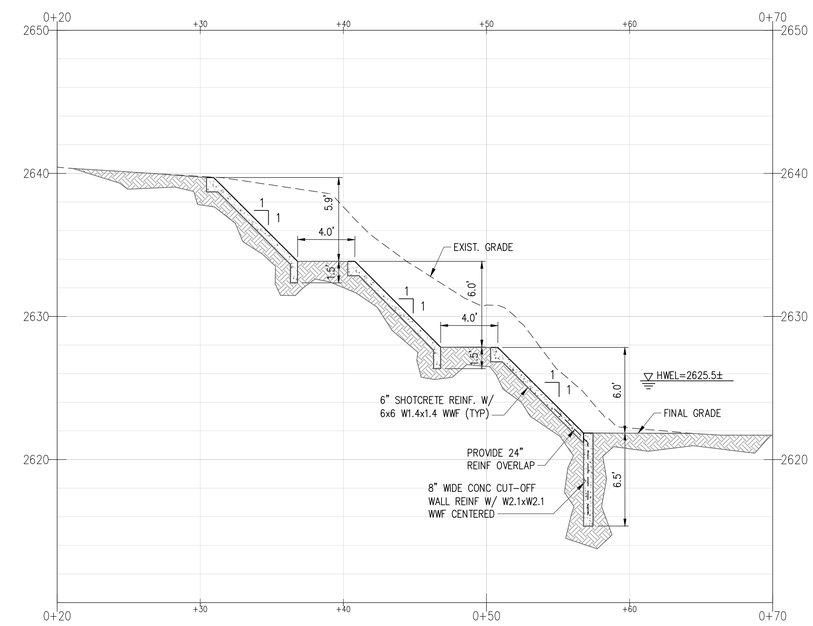

F SECTION
1"=5'

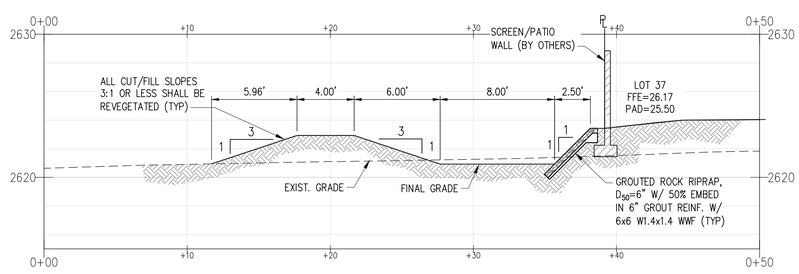

G SECTION
1"=5'

SLOPE PROTECTION COLOR REQUIREMENT: ALL RIPRAP (GROUTED, DUMPED AND/OR HAND-PLACED) AND SHOTCRETE SLOPE STABILIZATION SHALL BE OF NATURAL COLORS OF THE NATIVE ROCK AND SOILS OF THE SITE. RIPRAP SHALL TO BE OF "CORONADO BROWN" VARIETY OR APPVD EQUAL. ALL SHOTCRETE SHALL BE OF A CONSISTANT "DESERT TAN" COLOR ACHIEVED BY THE USE OF INTEGRAL PIGMENT ADMIXTURES.

Registered Professional Engineer (Civil) 22217 COREY THOMPSON 4-9-26 Date Signed ARIZONA U.S.A.

PRELIMINARY PLAT FOR

HALLAMARK

LOTS 1 - 69, AND COMMON AREA "A" (PRIVATE STREETS & PUBLIC UTILITIES) COMMON AREAS "B-1" & "B-2" (OPEN SPACE, DRAINAGE, UTILITIES & LANDSCAPE), COMMON AREA "C-1" & "C-2" (FUNCTIONAL OPEN SPACE & DRAINAGE), AND COMMON AREA "D-1" THRU "D-11" (NATURAL OPEN SPACE)

PORTION OF THE S 1/2 OF THE SW 1/4 OF SECTION 10, TOWNSHIP 12 SOUTH, RANGE 13 EAST GILA & SALT RIVER MERIDIAN, TOWN OF ORO VALLEY, PIMA COUNTY, ARIZONA

January 9, 2026 SCALE: AS SHOWN CONTOUR INTERVAL: 1'
RELATED CASE #'S: 2500142
OV99951 [(O) 02-17]

520-795-1000
rickengineering.com
3945 E FORT LOWELL RD #111
TUCSON, AZ 85712
RICK
SAN DIEGO ORANGE RIVERSIDE SACRAMENTO SAN LUIS OBISPO
SANTA CLARITA PHOENIX TUCSON LAS VEGAS DENVER

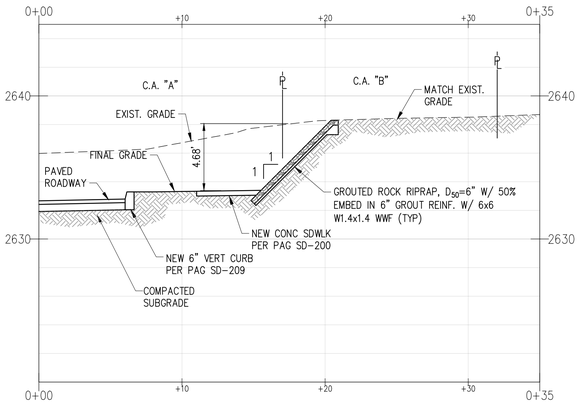

A SECTION 1"=5'

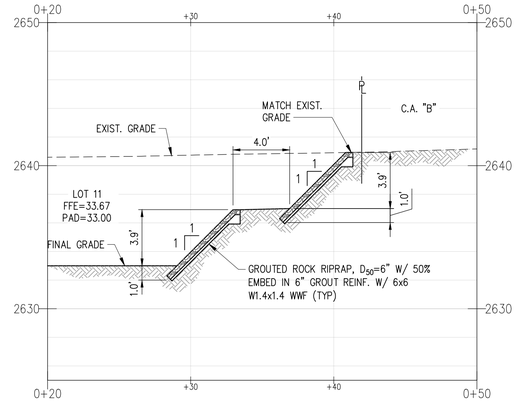

B SECTION 1"=5'

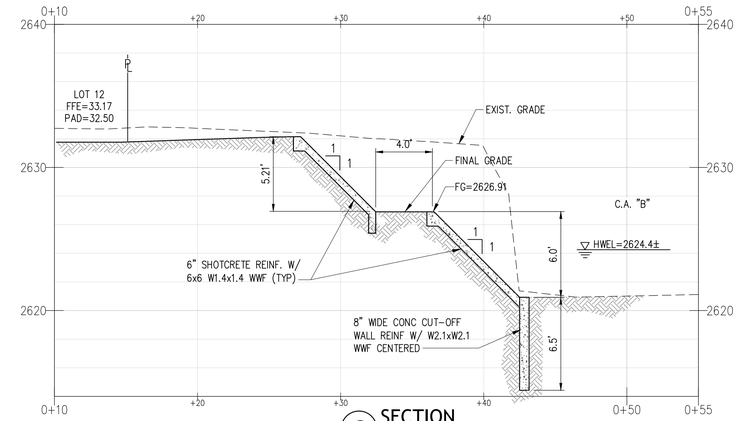

C SECTION 1"=5'

SLOPE PROTECTION COLOR REQUIREMENT: ALL RIPRAP (GROUTED, DUMPED AND/OR HAND-PLACED) AND SHOTCRETE SLOPE STABILIZATION SHALL BE OF NATURAL COLORS OF THE NATIVE ROCK AND SOILS OF THE SITE. RIPRAP SHALL TO BE OF "CORONADO BROWN" VARIETY OR APPVD EQUAL. ALL SHOTCRETE SHALL BE OF A CONSISTANT "DESERT TAN" COLOR ACHIEVED BY THE USE OF INTEGRAL PIGMENT ADMIXTURES.

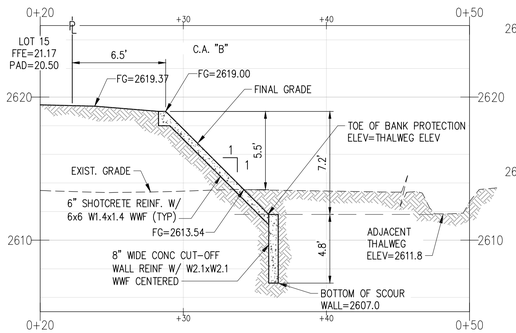

D SECTION 1"=5'

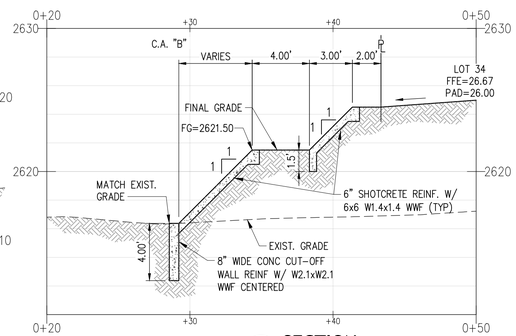

E SECTION 1"=5'

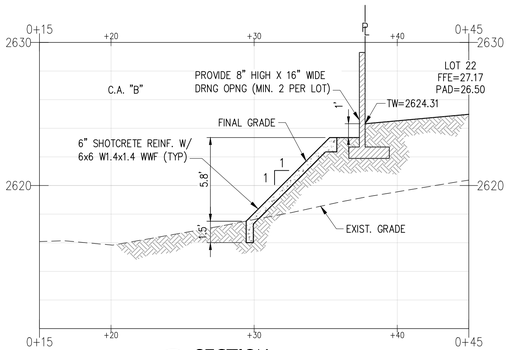

F SECTION 1"=5'

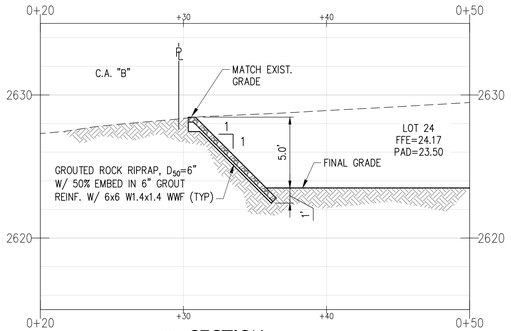

G SECTION 1"=5'

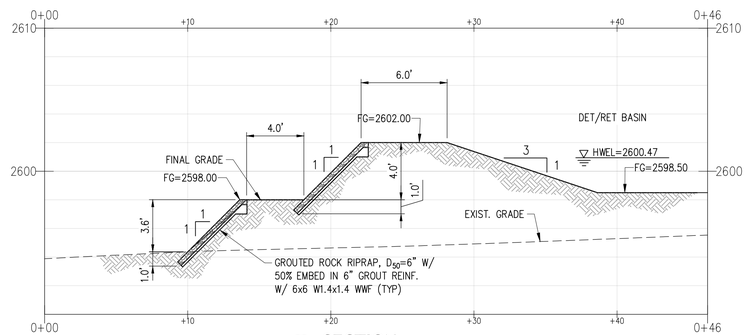

H SECTION 1"=5'

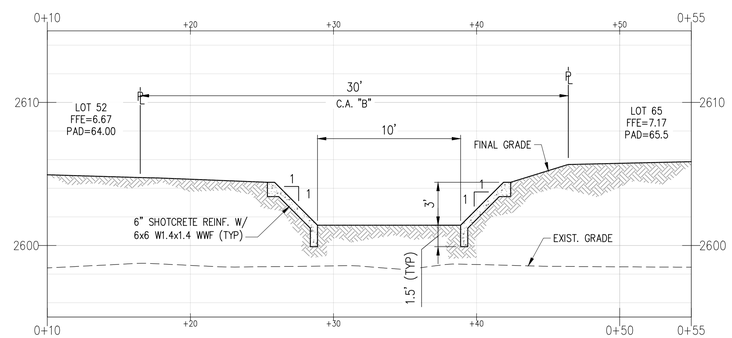

I SECTION 1"=5'

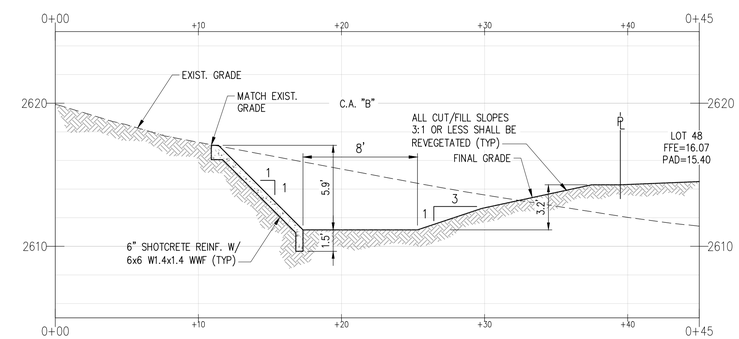

J SECTION 1"=5'

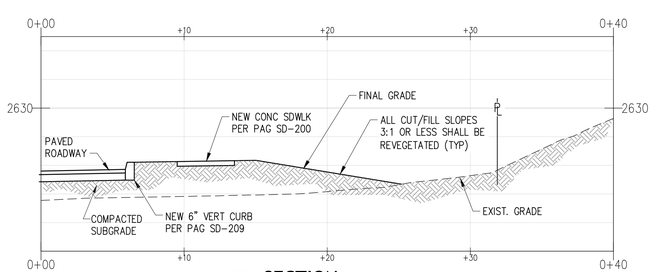

K SECTION 1"=5'

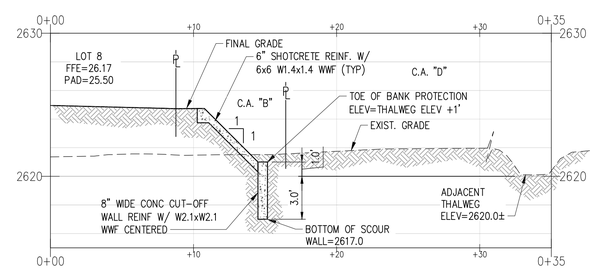

L SECTION 1"=5'

PRELIMINARY PLAT FOR

HALLAMARK

LOTS 1 - 69, AND COMMON AREA "A" (PRIVATE STREETS & PUBLIC UTILITIES) COMMON AREAS "B-1" & "B-2" (OPEN SPACE, DRAINAGE, UTILITIES & LANDSCAPE), COMMON AREA "C-1" & "C-2" (FUNCTIONAL OPEN SPACE & DRAINAGE), AND COMMON AREA "D-1" THRU "D-11" (NATURAL OPEN SPACE)

PORTION OF THE S 1/2 OF THE SW 1/4 OF SECTION 10, TOWNSHIP 12 SOUTH, RANGE 13 EAST GILA & SALT RIVER MERIDIAN, TOWN OF ORO VALLEY, PIMA COUNTY, ARIZONA

January 9, 2026 SCALE: AS SHOWN CONTOUR INTERVAL: 1'

RELATED CASE #'S: 2500142
OV99951 [(O) 02-17]

Registered Professional Engineer (Civil) CERTIFICATE NO. 22217 COREY THOMPSON Date Signed 1-9-26 ARIZONA U.S.A.

520-795-1000
rickengineering.com
3945 E FORT LOWELL RD #111
TUCSON, AZ 85712
RICK
SAN DIEGO ORANGE RIVERSIDE SACRAMENTO SAN LUIS OBISPO
SANTA CLARITA PHOENIX TUCSON LAS VEGAS DENVER

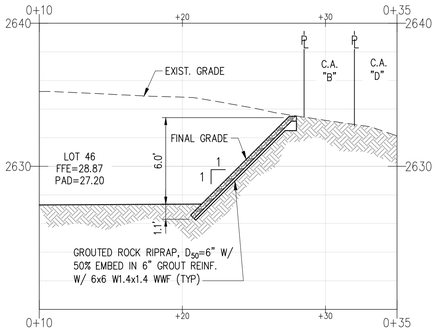

A SECTION 1"=5'

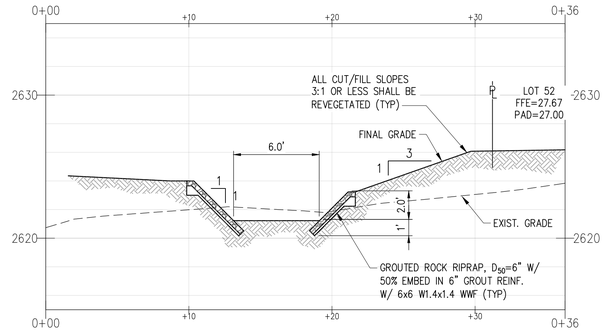

B SECTION 1"=5'

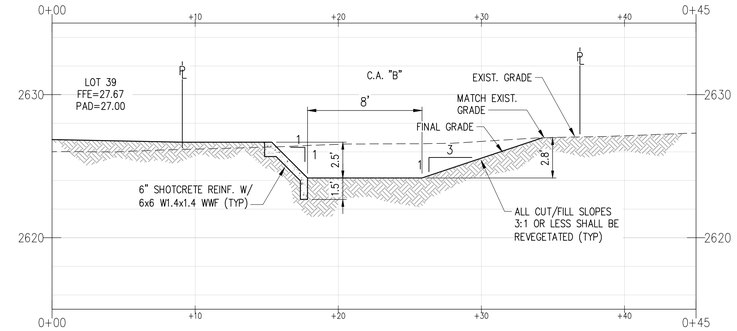

C SECTION 1"=5'

SLOPE PROTECTION COLOR REQUIREMENT: ALL RIPRAP (GROUTED, DUMPED AND/OR HAND-PLACED) AND SHOTCRETE SLOPE STABILIZATION SHALL BE OF NATURAL COLORS OF THE NATIVE ROCK AND SOILS OF THE SITE. RIPRAP SHALL TO BE OF "CORONADO BROWN" VARIETY OR APPVD EQUAL. ALL SHOTCRETE SHALL BE OF A CONSISTANT "DESERT TAN" COLOR ACHIEVED BY THE USE OF INTEGRAL PIGMENT ADMIXTURES.

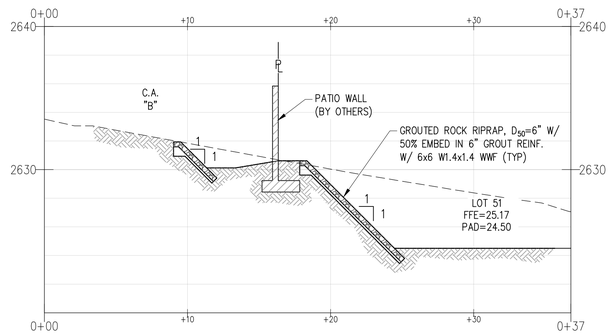

D SECTION 1"=5'

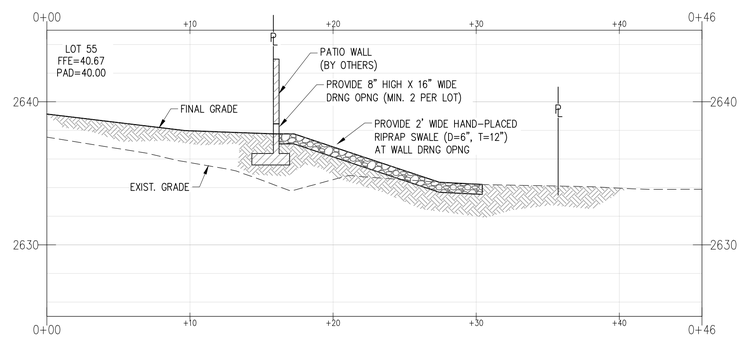

E SECTION 1"=5'

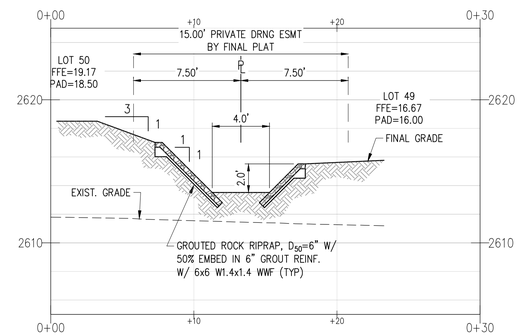

F SECTION 1"=5'

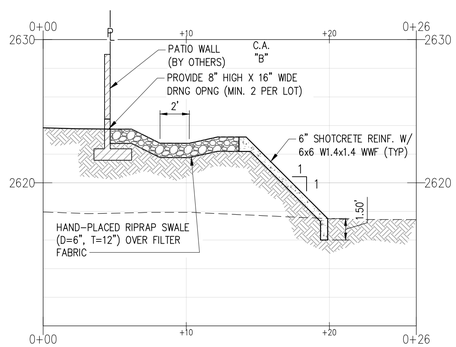

G SECTION 1"=5'

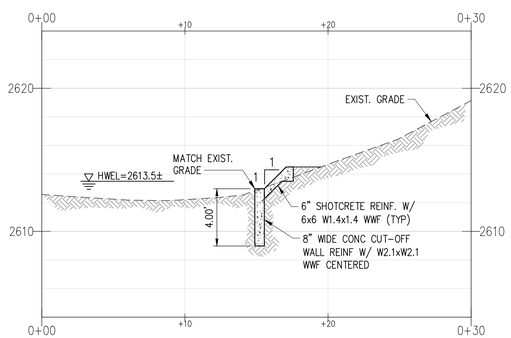

H SECTION 1"=5'

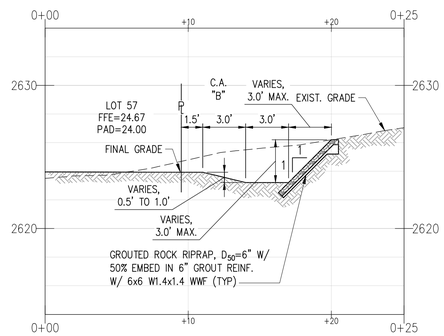

I SECTION 1"=5'

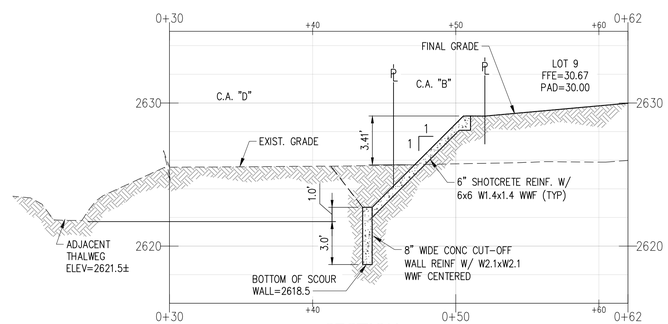

J SECTION 1"=5'

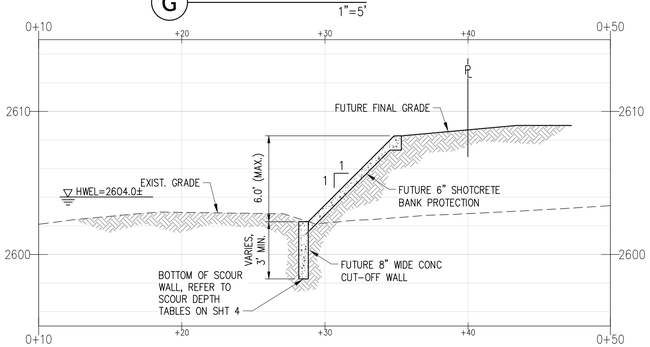

K SECTION 1"=5'

PRELIMINARY PLAT FOR

HALLAMARK

LOTS 1 - 69, AND COMMON AREA "A" (PRIVATE STREETS & PUBLIC UTILITIES) COMMON AREAS "B-1" & "B-2" (OPEN SPACE, DRAINAGE, UTILITIES & LANDSCAPE), COMMON AREA "C-1" & "C-2" (FUNCTIONAL OPEN SPACE & DRAINAGE), AND COMMON AREA "D-1" THRU "D-11" (NATURAL OPEN SPACE)

PORTION OF THE S 1/2 OF THE SW 1/4 OF SECTION 10, TOWNSHIP 12 SOUTH, RANGE 13 EAST GILA & SALT RIVER MERIDIAN, TOWN OF ORO VALLEY, PIMA COUNTY, ARIZONA

Registered Professional Engineer (Civil) CERTIFICATE NO. 22217 COREY THOMPSON Date Signed 01-9-26 ARIZONA, U.S.A.

January 9, 2026 SCALE: AS SHOWN CONTOUR INTERVAL: 1'
RELATED CASE #'S: 2500142
OV99951 [(O) 02-17]

520-795-1000
rickengineering.com
3945 E FORT LOWELL RD #111
TUCSON, AZ 85712
RICK
SAN DIEGO ORANGE RIVERSIDE SACRAMENTO SAN LUIS OBISPO
SANTA CLARITA PHOENIX TUCSON LAS VEGAS DENVER

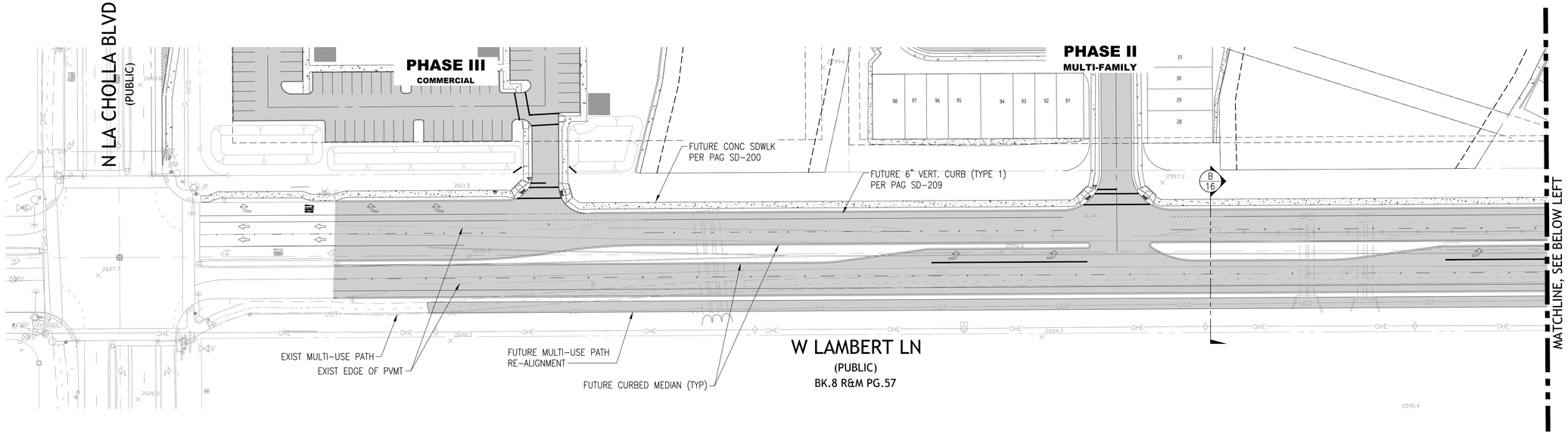

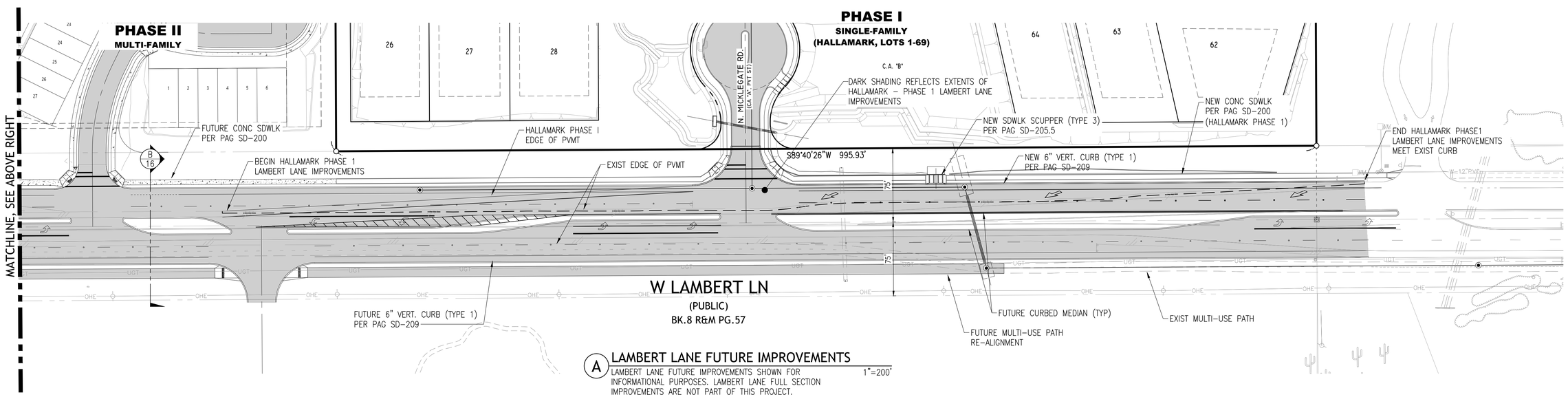

A LAMBERT LANE FUTURE IMPROVEMENTS

LAMBERT LANE FUTURE IMPROVEMENTS SHOWN FOR INFORMATIONAL PURPOSES. LAMBERT LANE FULL SECTION IMPROVEMENTS ARE NOT PART OF THIS PROJECT. 1"=200'

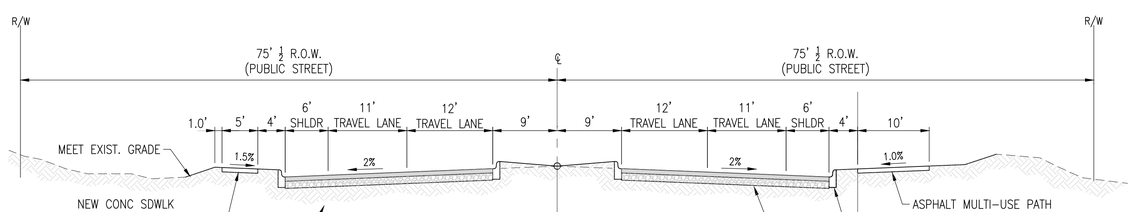

B LAMBERT LANE - FUTURE

SECTION SHOWN FOR INFORMATIONAL PURPOSES. LAMBERT LANE FULL SECTION IMPROVEMENTS ARE NOT PART OF THIS PROJECT. 1"=10'

Professional Engineer (Civil)
CERTIFICATE NO. 22217
COREY THOMPSON
ARIZONA U.S.A.
Date Signed 1-7-26

PRELIMINARY PLAT FOR

HALLAMARK

LOTS 1 - 69, AND COMMON AREA "A" (PRIVATE STREETS & PUBLIC UTILITIES) COMMON AREAS "B-1" & "B-2" (OPEN SPACE, DRAINAGE, UTILITIES & LANDSCAPE), COMMON AREA "C-1" & "C-2" (FUNCTIONAL OPEN SPACE & DRAINAGE), AND COMMON AREA "D-1" THRU "D-11" (NATURAL OPEN SPACE)

PORTION OF THE S 1/2 OF THE SW 1/4 OF SECTION 10, TOWNSHIP 12 SOUTH, RANGE 13 EAST GILA & SALT RIVER MERIDIAN, TOWN OF ORO VALLEY, PIMA COUNTY, ARIZONA

January 9, 2026 SCALE: AS SHOWN CONTOUR INTERVAL: 1'

RELATED CASE #'S: 2500142
OV99951 [(O) 02-17]

520-795-1000
rickengineering.com
3945 E FORT LOWELL RD #111
TUCSON, AZ 85712
RICK
SAN DIEGO ORANGE RIVERSIDE SACRAMENTO SAN LUIS OBISPO
SANTA CLARITA PHOENIX TUCSON LAS VEGAS DENVER

C:\RICK\Projects\T05000\5577_Hallamark_Sub\Civil\PlanSets\Preliminary Plat\5577-Pre-Plat-10 & 16.dwg