FINAL LANDSCAPE PLAN
LA POSADA AT PUSCH RIDGE
(A REVISION TO FINAL LANDSCAPE PLAN FOR NAKOMA SKY)
PHASES 1, 2, 3 AND FUTURE PHASES
2102195

GENERAL NOTES

1. THE GROSS AREA OF THIS DEVELOPMENT IS 79.5 ACRES
2. TOTAL PHASE 1 GRADED AREA IS 26± ACRES
3. TOTAL PHASE 1 UNDISTURBED AREA = 53.5± ACRES
4. TOTAL AREA OF OPEN SPACE REQUIRED = 23.85 ACRES (30%),
   TOTAL AREA OF OPEN SPACE PROVIDED = 34.5 ACRES (44%)
5. TOTAL AREA OF LANDSCAPED COMMON AREA = 8.48 ACRES
6. BUILDING SETBACKS REQUIRED/PROVIDED (PER NAKOMA SKY P.A.D. STANDARDS):
   6.1. MULTIPLE USE DISTRICT:
   NORTHERN BOUNDARY = 20'
   CANADA DEL ORO WASH = 50'
   6.2. INDEPENDENT LIVING DISTRICT:
   NORTHERN BOUNDARY= 20' (DEVELOPMENT AREA B AS SHOWN ON EXHIBIT P PAD ZONING DISTRICTS WILL PROVIDE A 32 FOOT SETBACK ALONG ITS NORTHERN BOUNDARY TO MATCH THE BUILDING SETBACK OF THE RESIDENTIAL LOT LOCATED ON THE PROPERTY TO THE NORTH OF THE SITE).
   1ST AVE = 50'
   EASTERN BOUNDARY = 20'
   CANADA DEL ORO WASH = 50'
   6.3 COMMERCIAL, MEDICAL AND SERVICE DISTRICT:
   1ST AVE = 50'
   CANADA DEL ORO WASH = 50'
7. COMMON AREAS / OPEN SPACE SHALL BE OWNED AND MAINTAINED BY LA POSADA AT PUSCH RIDGE
8. EXISTING ZONING IS NAKOMA SKY PLANNED AREA DEVELOPMENT
9. LANDSCAPE BUFFERYARDS: SEE CHART THIS SHEET
10. ASSURANCES FOR SITE IMPROVEMENTS (E.G, WATER SERVICE, SITE STABILIZATION) LANDSCAPING AND RE-VEGETATION BONDS MUST BE POSTED PRIOR TO ISSUANCE OF GRADING PERMITS.
11. PROPERTY OWNER SHALL MAINTAIN BUFFERYARD PLANTINGS TO ENSURE UNOBSTRUCTED VISIBILITY TO MOTORISTS. ALL SHRUBS, ACCENTS, AND GROUNDCOVERS SHALL NOT EXCEED THIRTY (30) INCHES IN HEIGHT WITHIN SITE VISIBILITY TRIANGLES. TREES WITHIN SITE VISIBILITY TRIANGLES WILL BE MAINTAINED TO ENSURE THAT BRANCHES / FOLIAGE IS NOT BELOW A HEIGHT OF SIX (6') FEET.
12. IN THE EVENT OF ABANDONMENT OF THE SITE AFTER GRADING / DISTURBANCE OF NATURAL AREAS, DISTURBED AREAS SHALL BE RE-VEGETATED WITH A NON-IRRIGATED HYDRO SEED MIX FROM OVZCR ADDENDUM D: APPROVED REVEGETATION SEED MIX.
13. ALL PLANT MATERIAL SHALL MEET THE MINIMUM STANDARDS CONTAINED IN THE CURRENT EDITIONS OF THE ARIZONA NURSERY ASSOCIATION'S GROWERS COMMITTEE RECOMMENDED TREE SPECIFICATIONS AND THE AMERICAN ASSOCIATION OF NURSERYMEN AS TO SIZE, CONDITION AND APPEARANCE.
14. DEEP-ROOTED VEGETATION AND TREES SHALL NOT BE PLANTED CLOSER THAN 7.5' FROM A PUBLIC WATER LINE. EXCEPTIONS FOR ALTERNATIVE DESIGN SOLUTIONS SUCH AS ROOT BARRIERS SHALL BE CONSIDERED ON A CASE-BY-CASE BASIS
15. LANDSCAPE SHALL CONFORM TO ORO VALLEY LANDSCAPE CODE.
16. MITIGATION OF SURVEYED PLANTS IN THE NATIVE PLANT PRESERVATION PLAN WILL BE INCORPORATED INTO THE LANDSCAPE DESIGN.
17. ALL PLANTS TO BE IRRIGATED WITH AN UNDERGROUND AUTOMATIC DRIP IRRIGATION SYSTEM.
18. HYDROSEED ALL AREAS DISTURBED BY GRADING OPERATIONS AS SHOWN ON PLAN. DECOMPOSED GRANITE SHALL BE PLACED AS SHOWN ON PLAN.
19. LANDSCAPED AREAS THAT ARE SUSCEPTIBLE TO DAMAGE BY PEDESTRIAN OR AUTO TRAFFIC SHALL BE PROTECTED BY APPROPRIATE CURBS, TREE GUARDS OR OTHER DEVICES.
20. LANDSCAPE SHALL BE DESIGNED TO MINIMIZE SEDIMENT, SAND AND GRAVEL BEING CARRIED INTO THE STREETS BY STORM WATER.
21. LANDSCAPE DESIGN ENABLES ADEQUATE PLANT SPACING TO ENSURE SURVIVABILITY AT PLANT MATURITY.
22. ALL LANDSCAPED AREAS TO BE FINISHED WITH A NATURAL TOPPING OF AT LEAST TWO (2) INCHES IN DEPTH.
23. TREES AND LARGE SHRUBS SHALL BE ADEQUATELY SUPPORTED WHEN PLANTED
24. THE LIMITS OF GRADING SHALL BE STAKED IN THE FIELD, IN ACCORDANCE WITH SECTION 27.6.B.7.c.ii. DISTURBANCE OUTSIDE THE APPROVED GRADING LIMITS SHALL NOT BE PERMITTED.
25. THE DEVELOPER SHALL REPLACE REMOVED OR DAMAGED PLANT MATERIALS WITH LIKE SIZE AND SPECIES, AND SHALL MAINTAIN AND GUARANTEE THE REPLACEMENT PLANT MATERIALS FOR A PERIOD OF THREE (3) YEARS.
26. PROPERTY OWNER IS RESPONSIBLE FOR MAINTAINING THE TEMPORARY IRRIGATION SYSTEM AS LONG AS NECESSARY IN ORDER TO TRANSITION PLANTS OVER TO NATURAL SOURCES. ANY PLANT MATERIALS THAT DIE IN TRANSITION, FOR ANY REASONS, SHALL BE REPLACED IN ACCORDANCE WITH SECTION 27.6.E.4, MAINTENANCE.

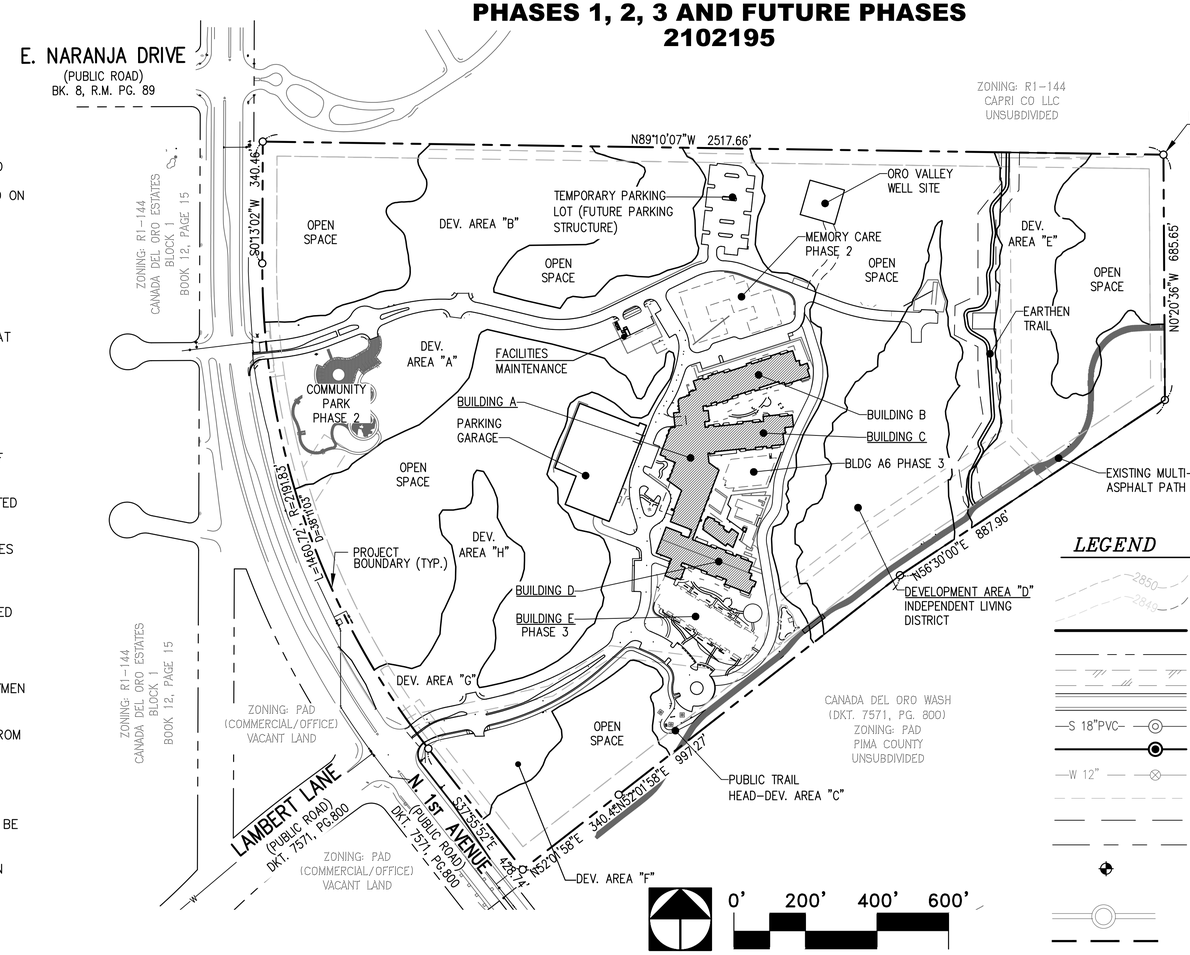

PROJECT OVERVIEW

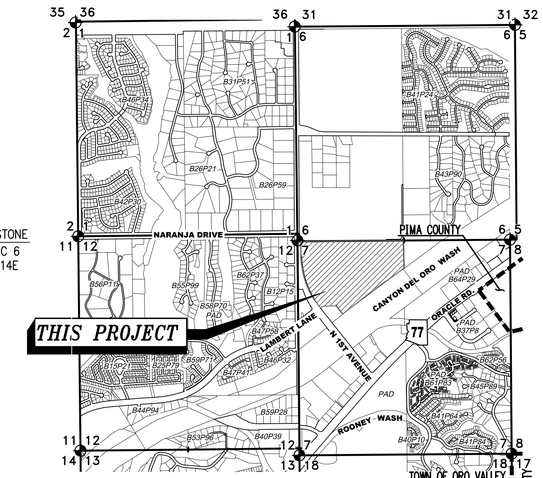

LOCATION MAP

3" = 1 MILE

A PORTION OF SECTION 7
T12S, R14E, G & S.R.M., TOWN OF ORO VALLEY,
PIMA COUNTY, ARIZONA

LEGEND

- EXIST. MAJOR CONTOUR
- EXIST. MINOR CONTOUR
- PROJECT BOUNDARY
- EXISTING LOT LINE
- EXIST. PAVEMENT
- PROPOSED CURB
- S 18"PVC — EXIST. PUBLIC SEWER LINE & MANHOLE
- NEW PUBLIC SEWER LINE & MANHOLE
- W 12" — EXIST. PUBLIC WATERLINE & VALVE
- EXISTING EASEMENT LINE
- BUILDING SETBACKS
- SECTION LINE
- SECTION CORNER OR 1/4 SECTION CORNER
- EX. STORM DRAIN SYSTEM
- DEVELOPED AREA BOUNDARY
- MATCHLINE
- ASPHALT PAVEMENT
- TOP OF SLOPE
- BOTTOM OF SLOPE
- SIGHT VISIBILITY TRIANGLE (SVT)
- EXISTING 100 YR FLOOD PLAIN
- PROPOSED 100 YR FLOOD PLAIN
- EROSION HAZARD SETBACK
- 404 JURISDICTION WASH AREA
- PROPOSED RIPRAP
- PROPOSED MULTI-USE PATH
- PROPOSED CONCRETE SIDEWALK
- PROPOSED STORM DRAIN
- PROPOSED WALL

APPROVAL

BY: _____ _____
PLANNING AND ZONING ADMINISTRATOR DATE

BUFFERYARD NOTES

1. BUFFERYARDS ARE BASED ON REQUIREMENTS OF THE NAKOMA SKY P.A.D. AND APPROVED CLP

BUFFERYARD	WIDTH	TOTAL PLANTS REQUIRED PER 100'			PLANTS PROVIDED PER 100'			GROUNDCOVER TREATMENT
		TREES	SHRUBS	ACCENTS	TREES	SHRUBS	ACCENTS	
#A1, A2, A3 NORTH FIRST AVENUE	40' NATURAL DESERT							
#A4, A5 NORTH FIRST AVENUE	15' ENHANCED	5*	8*	15*	5	8	15	D.G.
#B1, B2, B3 NORTH R1-144	40' NATURAL DESERT							
#B4, B5 NORTH R1-144	15' NATURAL DESERT							
#C1 EAST R1-144	40' NATURAL DESERT							
#C2 EAST R1-144	15' NATURAL DESERT							
#D1, D2, SOUTH-P.A.D.	50' NATURAL DESERT							
#D3 SOUTH-P.A.D.	10' ENHANCED	4*	5*	10*	4	5	10	D.G.

*per approved CLP

SHEET INDEX

LANDSCAPE ARCHITECT

THE WLB GROUP, INC.
4444 E. BROADWAY BLVD.
TUCSON, AZ. 85711
(520) 881-7480
ATTN: GARY GRIZZLE, PLA
GGRIZZLE@WLBGROUP.COM

OWNER/DEVELOPER

LA POSADA AT PARK CENTRE, INC.
350 EAST MORNINGSIDE ROAD
GREEN VALLEY, AZ 85614
(520) 648-7912
ATTN: JONI CONDIT
JONI@LAPOSADAGV.COM

The WLB Group INC. WLB
Engineering Planning Surveying
Landscape Architecture Urban Design
Offices located in Tucson, Phoenix, Flagstaff, Arizona, and Las Vegas, Nevada
4444 East Broadway
Tucson, Arizona (520) 881-7480

Call at least two full working days before you begin excavation. ARIZONA 811 Arizona Blue Stake, Inc. Dial 8-1-1 or 1-800-STAKE-IT (782-5348) In Maricopa County: (602) 263-1100

REGISTERED LANDSCAPE ARCHITECT CERTIFICATE NO. 25621 GARY L. GRIZZLE Date Signed 3/30/22 ARIZONA U.S.A.

FINAL LANDSCAPE PLAN
LA POSADA AT PUSCH RIDGE
PHASE 1
(REVISION TO FINAL LANDSCAPE PLAN FOR NAKOMA SKY)
PHASES 1, 2, 3 AND FUTURE PHASES

ROONEY RANCH AREA Z RECORDED IN BOOK 62 M&P, PAGE 4, LOTS 1-68 AND COMMON AREAS "A", "B", AND "C" BEING A PORTION OF SECTION 7, TOWNSHIP 12 SOUTH, RANGE 14 EAST, G & S.R.M. TOWN OF ORO VALLEY, PIMA COUNTY, ARIZONA

MARCH 2022
WLB NO. 181057-G-E02
CONTOUR INTERVAL: 1' SCALE: 1"=40' AS SHOWN

G1.0

REFERENCE CASE #'S:
OV1601351
OV115-027
OV914-008
OV914-007A
OV903-03A
(O)15-14

Q:\181057\GE-01\02 Landscape\08 FLP\181057 la posada flp 01-G1.0 cover.dwg

COVER SHEET

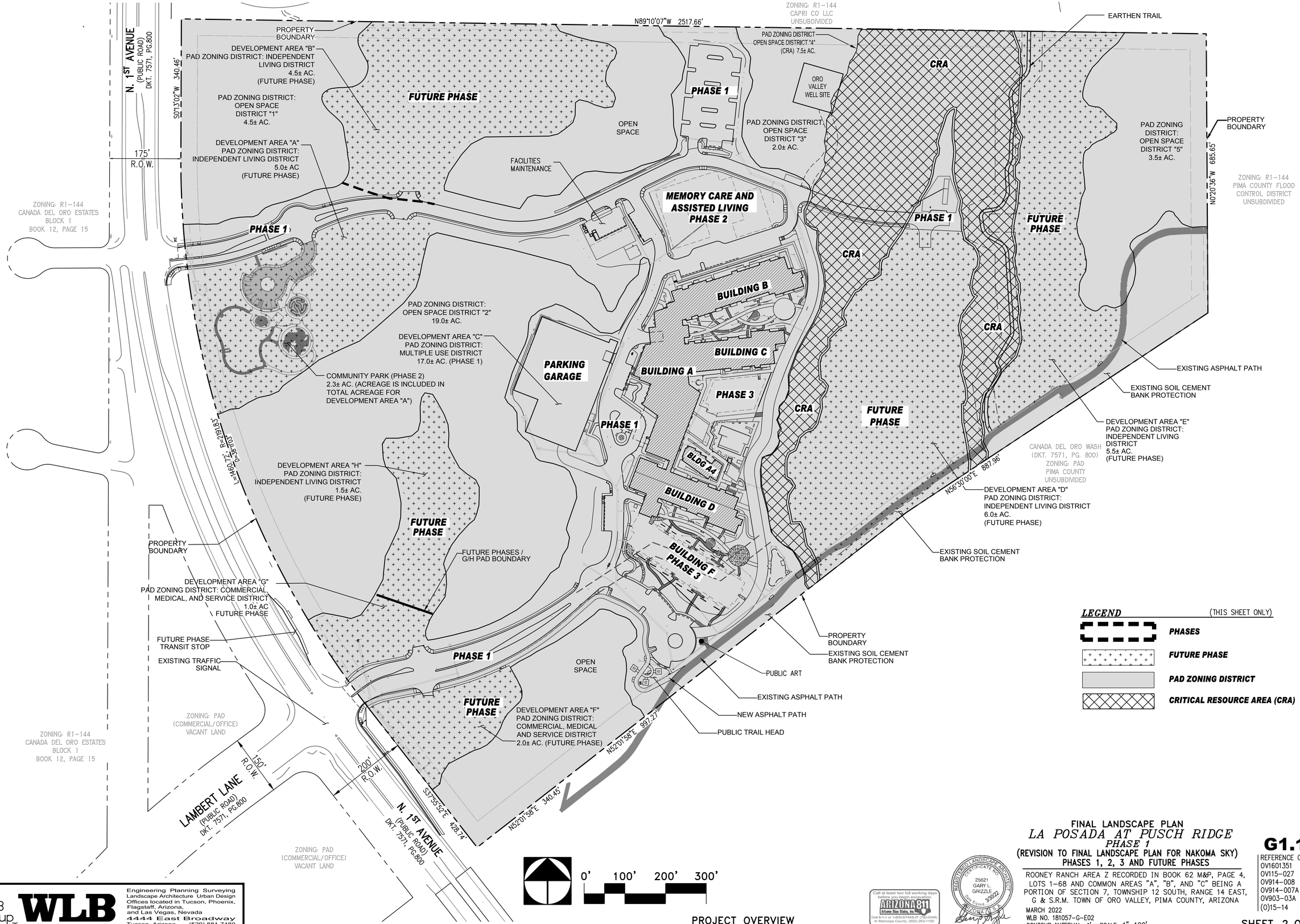

The WLB Group INC.

WLB

Engineering Planning Surveying
Landscape Architecture Urban Design
Offices located in Tucson, Phoenix, Flagstaff, Arizona, and Las Vegas, Nevada
4444 East Broadway
Tucson, Arizona (520) 881-7480

Q:\181057\GE-01\02 Landscape\08 FLP\181057 la posada flp 02-G1.1 overview.dwg

Call at least two full working days before you begin excavation.
ARIZONA 811
Arizona Blue Stake, Inc.
Dial 8-1-1 or 1-800-STAKE-IT (782-5348)
In Maricopa County (602) 263-1100

REGISTERED LANDSCAPE ARCHITECT
CERTIFICATE NO. 25621
GARY L. GRIZZLE
Date Signed 3/30/22
ARIZONA U.S.A.

FINAL LANDSCAPE PLAN
LA POSADA AT PUSCH RIDGE
PHASE 1
(REVISION TO FINAL LANDSCAPE PLAN FOR NAKOMA SKY)
PHASES 1, 2, 3 AND FUTURE PHASES

ROONEY RANCH AREA Z RECORDED IN BOOK 62 M&P, PAGE 4, LOTS 1–68 AND COMMON AREAS "A", "B", AND "C" BEING A PORTION OF SECTION 7, TOWNSHIP 12 SOUTH, RANGE 14 EAST, G & S.R.M. TOWN OF ORO VALLEY, PIMA COUNTY, ARIZONA

MARCH 2022
WLB NO. 181057–G–E02
CONTOUR INTERVAL: 1' SCALE: 1"=100'

G1.1

REFERENCE CASE #'S:
OV1601351
OV115–027
OV914–008
OV914–007A
OV903–03A
(O)15–14

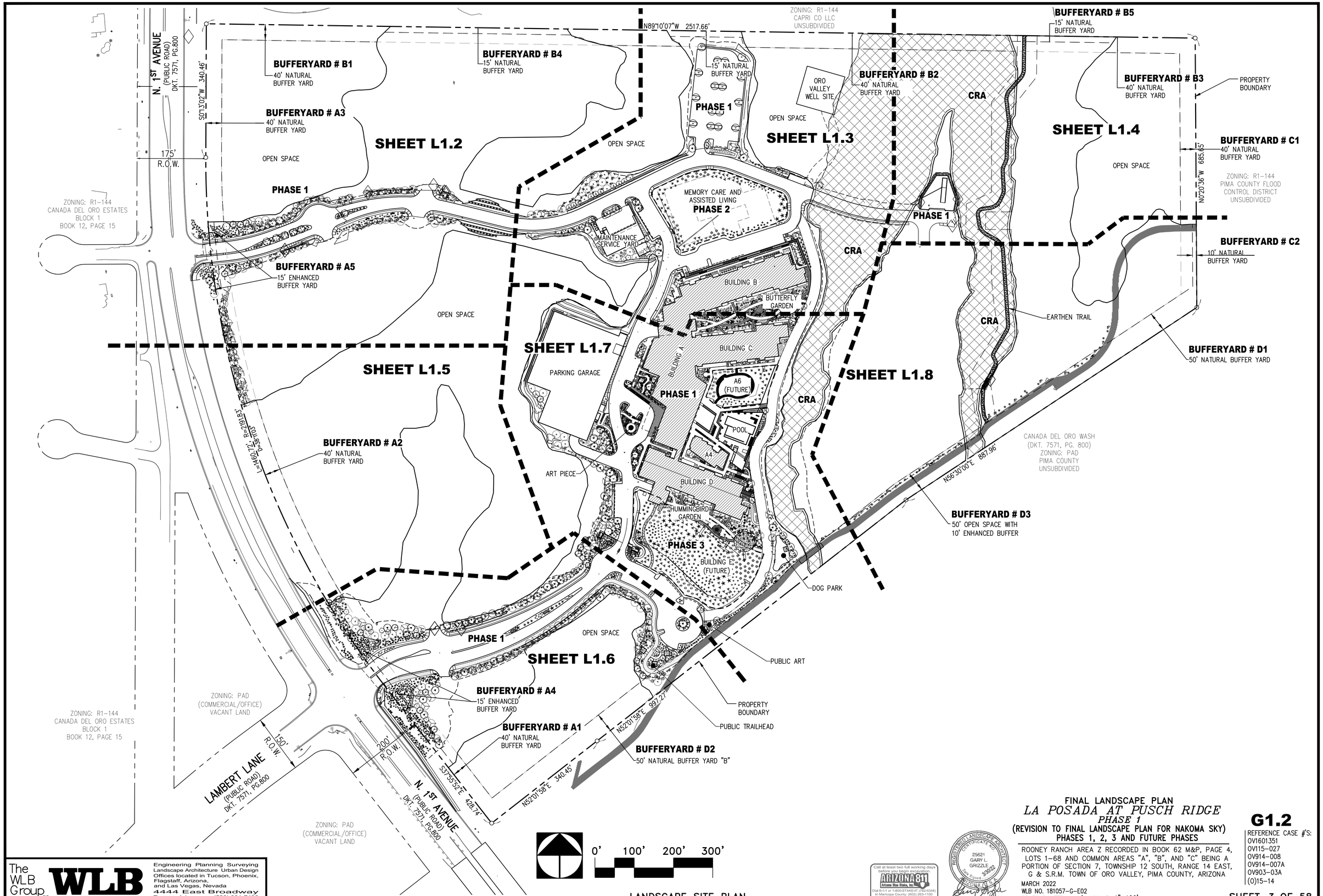

LANDSCAPE SITE PLAN

The WLB Group INC.

WLB

Engineering Planning Surveying
Landscape Architecture Urban Design
Offices located in Tucson, Phoenix, Flagstaff, Arizona, and Las Vegas, Nevada
4444 East Broadway
Tucson, Arizona (520) 881-7480

Q:\181057\GE-01\02 Landscape\08 FLP\181057 la posada flp 03-G1.2 land site plan.dwg

Call at least two full working days before you begin excavation.
ARIZONA 811
Arizona Blue Stake, Inc.
Dial 8-1-1 or 1-800-STAKE-IT (782-5348)
In Maricopa County: (602) 263-1100

REGISTERED LANDSCAPE ARCHITECT
CERTIFICATE NO.
25621
GARY L. GRIZZLE
Date Signed 3/30/22
ARIZONA, U.S.A.

FINAL LANDSCAPE PLAN
LA POSADA AT PUSCH RIDGE
PHASE 1
(REVISION TO FINAL LANDSCAPE PLAN FOR NAKOMA SKY)
PHASES 1, 2, 3 AND FUTURE PHASES

ROONEY RANCH AREA Z RECORDED IN BOOK 62 M&P, PAGE 4, LOTS 1-68 AND COMMON AREAS "A", "B", AND "C" BEING A PORTION OF SECTION 7, TOWNSHIP 12 SOUTH, RANGE 14 EAST, G & S.R.M. TOWN OF ORO VALLEY, PIMA COUNTY, ARIZONA

MARCH 2022
WLB NO. 181057-G-E02
CONTOUR INTERVAL: 1' SCALE: 1"=100'

G1.2

REFERENCE CASE #'S:
OV1601351
OV115-027
OV914-008
OV914-007A
OV903-03A
(O)15-14

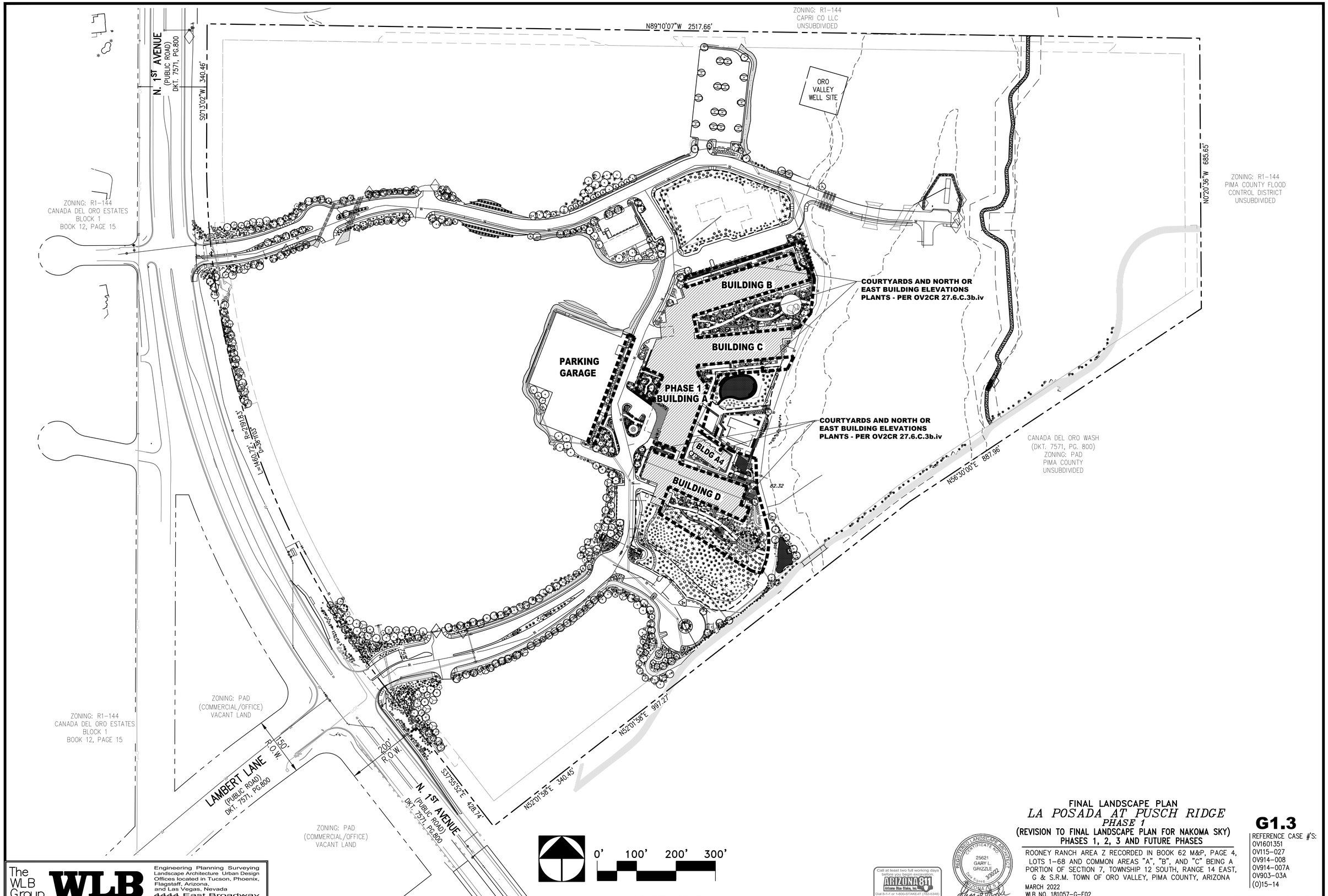

COURTYARD PLAN

The WLB Group INC.

WLB

Engineering Planning Surveying
Landscape Architecture Urban Design
Offices located in Tucson, Phoenix, Flagstaff, Arizona, and Las Vegas, Nevada
4444 East Broadway
Tucson, Arizona (520) 881-7480

Q:\181057\GE-01\02 Landscape\08 FLP\181057 la posada flp 04-G1.3 courtyard.dwg

Call at least two full working days before you begin excavation.
ARIZONA 811
Arizona Blue Stake, Inc.
Dial 8-1-1 or 1-800-STAKE-IT (782-5348)
In Maricopa County: (602) 263-1100

REGISTERED LANDSCAPE ARCHITECT
CERTIFICATE NO. 25621
GARY L. GRIZZLE
Date Signed 3/30/23
ARIZONA, U.S.A.

FINAL LANDSCAPE PLAN
LA POSADA AT PUSCH RIDGE
PHASE 1
(REVISION TO FINAL LANDSCAPE PLAN FOR NAKOMA SKY)
PHASES 1, 2, 3 AND FUTURE PHASES

ROONEY RANCH AREA Z RECORDED IN BOOK 62 M&P, PAGE 4, LOTS 1-68 AND COMMON AREAS "A", "B", AND "C" BEING A PORTION OF SECTION 7, TOWNSHIP 12 SOUTH, RANGE 14 EAST, G & S.R.M. TOWN OF ORO VALLEY, PIMA COUNTY, ARIZONA

MARCH 2022
WLB NO. 181057-G-E02
CONTOUR INTERVAL: 1' SCALE: 1"=100'

G1.3

REFERENCE CASE #'S:
OV1601351
OV115-027
OV914-008
OV914-007A
OV903-03A
(O)15-14

PLANT MATERIAL / WATER USE SCHEDULE

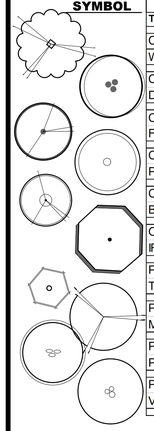

SYMBOL	PLANT NAME	QUANTITY	SIZE	WATER USE TYPE (NEEDS)	ADWR ANNUAL USE AT MATURITY (GALLONS)	ANNUAL WATER USE QUANTITY TIMES ADWR ANNUAL USE (GALLONS)	MONTHLY WATER USE ADWR ANNUAL USE DIVIDED BY 12 MONTHS
	TREES						
	CELTIS RETICULATA WESTERN / NETLEAF HACKBERRY	14	36" BOX	2	5,702	79,828	6,652
	CERCIDUM HYBRID 'DESERT MUSUEM' DESERT MUSEUM PALO VERDE	55	24" BOX	1	3,948	217,140	18,095
	CERCIDIUM MICROPHYLLUM FOOTHILL PALO VERDE	23	24" BOX	1	1,754	40,342	3,362
	CERCIDUM PRAECOX PALO BREA	16	36" BOX	2	3,960	63,360	5,280
	CHILOPSIS LINEARIS 'BUBBA JONES' BUBBA JONES DESERT WILLOW	85	24" BOX	2	3,960	336,600	28,050
	OLNEYA TESOTA IRONWOOD	15	48" BOX	1	2,741	41,115	3,426
	PITTECELLOBIUM FLEXICAULE (EBENOPSIS) TEXAS EBONY	36	24" BOX	2	2,534	91,224	7,602
	PROSOPIS GLANDULOSA MAVERICK MAVERICK HYBRID MESQUITE	35	36" BOX	2	5,702	199,570	16,631
	PROSOPIS HYBRID PHOENIX PHOENIX HYBRID THORNLESS MESQUITE	42	36" BOX	2	10,137	425,754	35,480
	PROSOPIS VELUTINA VELVET MESQUITE	75 16	24" BOX 48" BOX	2 2	5,702 5,702	427,650 91,232	35,638 7,603

SYMBOL	PLANT NAME	QUANTITY	SIZE	WATER USE TYPE (NEEDS)	ADWR ANNUAL USE AT MATURITY (GALLONS)	ANNUAL WATER USE QUANTITY TIMES ADWR ANNUAL USE (GALLONS)	MONTHLY WATER USE ADWR ANNUAL USE DIVIDED BY 12 MONTHS
	SHRUBS						
	ACACIA CONSTRICTA WHITETHORN ACACIA	42	15 Gallon	1	5,702	239,484	19,957
	ACACIA GREGGII CAT CLAW ACACIA	32	15 Gallon	1	5,702	182,464	15,205
	ALOYSIA GRATISSIMMA FRAGRANT BEE BUSH	17	5 Gallon	2	405	6,885	574
	CALLIANDRA ERIOPHYLLA PINK FAIRY DUSTER	541	5 Gallon	1	70	37,870	3,156
	CELTIS PALLIDA DESERT HACKBERRY	32	15 Gallon	2	5,702	182,464	15,205
	CORDIA PARVIFOLIA LITTLE LEAF CORDIA	122	15 Gallon	1	439	53,558	4,463
	DODONEA VISCOSA GREEN HOPSEED BUSH	112	5 Gallon	1	632	70,784	5,899
	ENCELIA FARINOSA BRITTLEBUSH	188	5 Gallon	1	39	7,332	611
	ERIOGONUM WRIGHTII BUCKWHEAT	11	5 Gallon	1	70	770	64
	ERICAMERIA LARICIFOLIA 'BUTTERBLOOM' TUPERTINE BUSH	105	5 Gallon	1	70	7,350	613
	JUSTICIA CALIFORNCA CHUPAROSA	75	5 Gallon	2	101	7,575	631
	PSILOSTROPHE COOPERI PAPER FLOWER	24	5 Gallon	2	25	600	50
	RHUS VIRENS EVERGREEN SUMAC	11	15 Gallon	2	912	10,032	836
	SIMMONDSIA CHINENSIS JOJOBA	196	5 Gallon	1	281	55,076	4,590
	VIGUIERA DELTOIDEA GOLDEN EYE	235	5 Gallon	2	57	13,395	1,116
	ZINNIA ACEROSA DESERT ZINNIA	53	5 Gallon	1	57	3,021	252

SYMBOL	PLANT NAME	QUANTITY	SIZE	WATER USE TYPE (NEEDS)	ADWR ANNUAL USE AT MATURITY (GALLONS)	ANNUAL WATER USE QUANTITY TIMES ADWR ANNUAL USE (GALLONS)	MONTHLY WATER USE ADWR ANNUAL USE DIVIDED BY 12 MONTHS
	ACCENTS						
	AGAVE VICTORIAE-REGINAE QUEEN VICTORIA AGAVE	5	5 Gallon	2	57	285	24
	AGAVE PARYYI TUNCATA ARTICHOKE AGAVE	2	5 Gallon	2	57	114	10
	ASCLEPIAS LINAERIS 'MONARCH MAGNET' PINELEAF MILKWEED 'MONARCH MAGNET'	34	5 Gallon	2	57	1,938	162
	ASCLEPIAS SUBULATA DESERT MILKWEED	111	5 Gallon	2	57	6,327	527
	CARNEGIEA GIGANTEA SAGUARO	78	3' - 8' SPEARS	1	2,741	213,798	17,817
	DASYLIRION LONGISSIMUM TOOTHLESS SPOON	75	15 Gallon	2	158	11,850	988
	DASYLIRION WHEELERI DESERT SPOON	380	5 Gallon	1	110	41,800 -	3,483 -
	ECHINOCACTUS GRUSONII GOLDEN BARREL	15	6"-8" Diameter	1	39	585	49
	EUPHORBIA ANTISYPHILLITICA CANDELILLA	136	5 Gallon	1	39	5,304	442
	FEROCACTUS WISLIZENII FISH-HOOK BARREL	124	6"-8" Diameter	1	10	1,240	103
	FOUQUIERIA SPLENDENS OCOTILLO	47	8-15 Cane Minimum	1	281	13,207	1,101
	HESPERALOE FUNIFERA GIANT HESPERALOE	132	5 Gallon	1	110	14,520	1,210
	HESPERALOE PARVIFLORA RED YUCCA	242	5 Gallon	1	70	16,940	1,412
	HESPERALOE PARVIFLORA 'BRAKELIGHTS' BRAKELIGHTS RED YUCCA	446	5 Gallon	1	70	31,220	2,602
	NOLINA MICROCARPA BEAR GRASS	101	15 Gallon	1	158	15,958	1,330
	OPUNTIA ENGLEMANII PRICKLY PEAR	42	5 Gallon 3 Pad Minimum	1	158	6,636	553
	OPUNTIA VERSICOLOR BUCKHORN CHOLLA	19	5 Gallon	1	158	3,002	250
	PEDILANTHUS MACROCARPUS LADY'S SLIPPER	204	5 Gallon	1	25	5,100	425
	YUCCA ELATA SOAPTREE YUCCA	49	5 Gallon	1	281	13,769	1,147
	YUCCA RIGIDA BLUE YUCCA	3	15 Gallon	1	110	330	28
	TOTAL WATER AT MATURITY					3,296,398	274,700

SYMBOL	PLANT NAME	QUANTITY	SIZE	WATER USE TYPE (NEEDS)	ADWR ANNUAL USE AT MATURITY (GALLONS)	ANNUAL WATER USE QUANTITY TIMES ADWR ANNUAL USE (GALLONS)	MONTHLY WATER USE ADWR ANNUAL USE DIVIDED BY 12 MONTHS
	COURTYARDS AND NORTH OR EAST BUILDING ELEVATIONS PLANTS						
	ALOE BARBADENSIS BARBADOS ALOE	21	5 Gallon	3	25	525	44
	ALOE HYBRIS 'BLUE ELF' BLUE ELF ALOE	115	5 Gallon	3	79	9,085	757
	CAESALPINIA PULCHERRIMA REDBIRD OF PARADISE	5	5 Gallon	3	316	1,580	132
	CALLIANDRA HYBRID SIERRA STARR SIERRA STARR RED FAIRY DUSTER	75	5 Gallon	3	316	23,700	1,975
	CALLISTEMON CITRINUS BOTTLEBRUSH	10	15 Gallon	3	877	8,770	731
	CASSIA PHYLLODINEA SILVER CASSIA	50	5 Gallon	3	316	15,800	1,317
	CERCIS CANADENSIS V. MEXICANA MEXICAN REDBUD	3	24" BOX	3	1,974	5,922	494

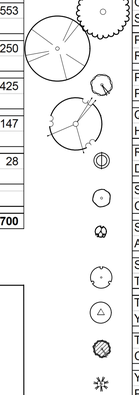

SYMBOL	PLANT NAME	QUANTITY	SIZE	WATER USE TYPE (NEEDS)	ADWR ANNUAL USE AT MATURITY (GALLONS)	ANNUAL WATER USE QUANTITY TIMES ADWR ANNUAL USE (GALLONS)	MONTHLY WATER USE ADWR ANNUAL USE DIVIDED BY 12 MONTHS
	COURTYARDS AND NORTH OR EAST BUILDING ELEVATIONS PLANTS CONTINUED						
	DALEA GREGGII TRAILING INDIGO	5	5 Gallon	2	513	2,565	214
	EREMOPHILA MACULATA `VALENTINE` EMU BUSH 'VALENTINE'	5	5 Gallon	1	110	550	46
	EUPHORBIA RESINFERA MOROCCAN MOUND	8	5 Gallon	2	39	312	26
	EUPHORBIA RIGIDA GOPHER PLANT	14	5 Gallon	2	57	798	67
	HYPTIS EMORYI DESERT LAVENDER	5	5 Gallon	3	468	2,340	195
	JUSTICIA CANDICANS RED JUSTICIA	22	5 Gallon	3	117	2,574	215
	JUSTICIA SPICIGERA MEXICAN HONEYSUCKLE	68	5 Gallon	3	117	7,956	663
	LANTANA CAMERA 'DALLAS RED' DALLAS RED LANTANA / OR EQUAL	13	5 Gallon	3	263	3,419	285
	LANTANA MONTEVIDENSIS PURPLE TRAILING LANTANA	8	5 Gallon	3	263	2,104	175
	LANTANA SPECIES 'GOLD MOUND' / 'NEW GOLD' 'NEW GOLD' / GOLD MOUND LANTANA	49	5 Gallon	3	263	12,887	1,074
	LEUCOPHYLLUM FRUTESCENS 'GREEN CLOUD' GREEN CLOUD TEXAS RANGER	26	5 Gallon	2	158	4,108	342
	LEUCOPHYLLUM FRUTESCENS 'HEAVENLY CLOUD' HEAVENLY CLOUD TEXAS RANGER	10	5 Gallon	2	158	1,580	132
	LEUCOPHYLLUM PRUINOSUM 'SIERRA BOUQUET' FRAGRANT CLOUD	5	5 Gallon	2	158	790	66
	LEUCOPHYLLUM ZYGOPHYLLUM BLUE RANGER	28	5 Gallon	3	70	1,960	163
	NANDINA DOMESTICA COMPACTA COMPACT NANDINA	145	5 Gallon	3	117	16,965	1,414
	OLEA EUROPAEA 'SWAN HILL' SWAN HILL OLIVE (FRUITLESS) OLIVE	6	48" BOX	3	6,579	39,474	3,290
	PISTACIA CHINENSIS 'RED PUSH' RED PUSH PISTACHE	3	36" BOX	3	10,137	30,411	2,534
	PUNICA GRANATUM POMEGRANATE	2	15 Gallon	2	1,426	2,852	238
	QUERCUS VIRGINIANA 'HERITAGE' HERITAGE LIVE OAK	8	36" BOX	3	18,276	146,208	12,184
	RUELLIA PENINSULARIS DESERT RUELLIA	9	5 Gallon	3	183	1,647	137
	SALVIA CLEVELANDII CLEVELAND SAGE	7	5 Gallon	3	183	1,281	107
	SALVIA GREGGI AUTUMN SAGE	23	5 Gallon	3	183	4,209	351
	SOPHORA SECUNDIFLORA TEXAS MOUINTAIN LAUREL	7	15 Gallon	2	1,426	9,982	832
	TECOMA X `SUNRISE` YELLOW BELLS	26	5 Gallon	2	405	10,530	878
	TECOMARIA CAPENSIS CAPE HONEYSUCKLE	14	5 Gallon	4	316	4,424	369
	YUCCA PALLIDA PALE LEAF YUCCA	4	5 Gallon	1	110	440	37
	TOTAL WATER AT MATURITY					91,400	7,617

The WLB Group INC.
WLB
Engineering Planning Surveying
Landscape Architecture Urban Design
Offices located in Tucson, Phoenix, Flagstaff, Arizona, and Las Vegas, Nevada
4444 East Broadway
Tucson, Arizona (520) 881-7480

Q:\181057\GE-01\02 Landscape\08 FLP\181057 la posada flp 05-L1.0_legend.dwg

PLANTING LEGEND

Call at least two full working days before you begin excavation.
ARIZONA 811
Arizona Blue Stake, Inc.
Dial 8-1-1 or 1-800-STAKE-IT (782-5348)
In Maricopa County: (602) 263-1100

REGISTERED LANDSCAPE ARCHITECT
CERTIFICATE NO. 25621
GARY L. GRIZZLE
3/30/22
Date Signed
ARIZONA, U.S.A.

FINAL LANDSCAPE PLAN
LA POSADA AT PUSCH RIDGE
PHASE 1
(REVISION TO FINAL LANDSCAPE PLAN FOR NAKOMA SKY)
PHASES 1, 2, 3 AND FUTURE PHASES

ROONEY RANCH AREA Z RECORDED IN BOOK 62 M&P, PAGE 4, LOTS 1–68 AND COMMON AREAS "A", "B", AND "C" BEING A PORTION OF SECTION 7, TOWNSHIP 12 SOUTH, RANGE 14 EAST, G & S.R.M. TOWN OF ORO VALLEY, PIMA COUNTY, ARIZONA

MARCH 2022
WLB NO. 181057–G–E02
CONTOUR INTERVAL: 1' SCALE: N/A

L1.0

REFERENCE CASE #'S:
0V1601351
0V115–027
0V914–008
0V914–007A
0V903–03A
(0)15–14

LANDSCAPE WATER PLAN

WINTER		SPRING			SUMMER	MONSOON				WINTER	
MONTH								1,59,0837			
1	2	3	4	5	6	7	8	9	10	11	12
YEAR 3:											
CONTINUE TO INCREASE IRRIGATION WATER USE AS NEEDED AS PLANTS MATURE UP TO, BUT NOT EXCEEDING, 100% ADWR VALUE BY END OF YEAR.											
268,201	287,963	302,079	324,664	333,133	333,133	228,676	228,676	262,554	282,317	271,024	265,378
TOTAL (100% ADWR)					**GAL/YEAR**						**3387798**
YEAR 4:											
BEGIN GRADUALLY DECREASING IRRIGATION TO BUFFER MEDIAN AND ROW AREAS IN ORDER TO REACH ZERO IRRIGATION IN THOSE AREAS BY END OF YEAR 5.											
201,151	215,972	226,559	243,498	249,850	249,850	171,507	171,507	196,916	211,737	203,268	199,033
TOTAL (75% ADWR)					**GAL/YEAR**						**2540849**
YEAR 5:											
CONTINUE DECREASING IRRIGATION TO BUFFER, MEDIAN, AND ROW AREAS. BY END OF YEAR 5 IRRIGATION TO BUFFER, MEDIAN AND ROW AREAS MUST BE ZERO AND TOTAL AMOUNT OF WATER USED AT SITE MUST MEET 50% OF ADWR MATURITY VALUE. (AVERAGE MONTHLY WATER USE = 14,837 GAL/MONTH)											
193,387	197,622	211,737	225,853	239,969	225,853	211,737	98,811	70,579	14,116	4,235	0
TOTAL (50% ADWR)					**GAL/YEAR**						**1693899**

HYDROSEED

HYDROSEED MIX SHALL BE ORO VALLEY APPROVED SEED MIX "D". HYDROSEED SHALL BE APPLIED AS INDICATED TO ALL DISTURBED AREAS NOT OTHERWISE IMPROVED.

AREA TO BE HYDROSEEDED SHALL INCORPORATE THE USE OF IMPRINTING OR PITTING OF THE SOIL. REVEGETATION IS REQUIRED TO RESTORE NATURAL VEGETATION ON DISTURBED LAND. TIMING OF REVEGETATION SHALL BE PLANTED TO MAXIMIZE AVAILABILTY OF RAINFALL. SEED MIX SHALL BE PER OVZCR ADDENDUM "D" , SPECIES AS FOLLOWS:

ORO VALLEY APPROVED REVEGETATION SEED MIX 'D'

Key: A = Annual; P = Perennial; C = Germinates and thrives in the cool season;
W = Germinates and thrives in warm season; C/W = Germinates and thrives in cool/warm seasons.

SHRUBS: minimum of 5 PLS/acre
- Acacia constricta, Whitethorn Acacia (P,W)
- Celtis pallida, Desert Hackberry (P,C/W)
- Encelia farinosa, Brittlebush (P,C/W)
- Haplopappus laricifolius [=Ericameria laricifolia], Turpentine Bush (P,C,W)

SMALL PERENNIALS: minimum of 5 PLS/acre
- Bahia absinthifolia, Desert Bahia (P,C)
- Baileya multiradiata, Desert Marigold (P,C/W)
- Cassia [= Senna] covesii, Desert Senna (P,W)
- Isocoma tenuisecta, Burrowwed (P,C/W)
- Psilostrophe cooperi, Paper Flower (P,C/W)
- Sphaeralcea ambigua, Desert Globemallow (P,C,W)
- Zinnia pumila, Desert Zinnia (P, C)

PERENNIAL GRASSES: minimum of 5 PLS/acre
- Aristida purpurea, Purple Three-Awn (P,W)
- Bouteloua curtipendula, Side-Oats Grama (P,W)
- Digitaria californica, Arizona Cottontop (P,W)
- Erioneuron pulchellum, Fluffgrass (P,C)
- Heteropogon contortus, Tanglehead (P,W)
- Muhlenbergia porteri, Bush Muhly (P,W)
- Pappophorum mucronulatum, Pappus Grass (P,W)
- Sporobolus cryptandrus, Sand Dropseed (P,W)

ANNUAL HERBS AND GRASSES: minimum of 5 PLS/acre
- Erigeron divergens, Spreading Fleabane (A,W)
- schscholtzia mexicana, Mexican Poppy (A,C)
- Evolvulus arizonicus, Arizona Blue Eyes (A,C)
- Lupinus arizonicus, Arizona Lupine (A,W)
- Lupinus concinnus, Bajada Lupine (A,W)
- Lupinus sparsiflorus, Desert Lupine (A,W)
- Orthocarpus purpurascens, Owlclover (A,C)
- Penstemon parryi, Parry's Penstemon (P,A,C/W)
- Penstemon subulatus, Scarlet Buglar (P,A,C/W)
- Salvia columbariae, Chia (A,C)
- Sphaeralcea coulteri, Globemallow (A,C)

ARTIFICIAL TURF

DOG PARK

MASTER TURF DAYTONA 60
WITH ZOEFILL ABSORBENT/COOLER/DEODORIZER

POOL AREA

MASTER TURF DAYTONA 60
WITH CRUMB RUBBER (30% CRUMB RUBBER AND 70% SILICA SAND)

DECOMPOSED GRANITE

2" MIN. DEPTH
3/4" SCREENED ON FLAT AREAS AND
1-1/4" SCREENED ON SLOPES AND IN FLOW CHANNELS.
COLOR: "APACHE BROWN"

APPLY TO ALL PLANTED AREAS AND AREAS NOT COVERED BY BUILDINGS, PAVEMENT, OR HYDROSEED

DECOMPOSED GRANITE WITHIN DOG PARK AREA

2" MIN. DEPTH
3/8" MINUS
COLOR: "DESERT GOLD"

RIP RAP

RIP RAP COLOR: "APACHE BROWN" OR EQUAL

LANDSCAPE ROCK

5" - 7" DIA. COLOR: "APACHE BROWN" OR EQUAL

BOULDERS - APACHE RED OR CATALINA GNEISS (OWNER TO APPROVE)

SYMBOL	QTY	SIZE (FT.)	COMMENTS
	119	1 X 2 X 2	
	163	2 X 2 X 3	
	57	3 X 3 X 3	

FINAL LANDSCAPE PLAN
LA POSADA AT PUSCH RIDGE
PHASE 1
(REVISION TO FINAL LANDSCAPE PLAN FOR NAKOMA SKY)
PHASES 1, 2, 3 AND FUTURE PHASES

ROONEY RANCH AREA Z RECORDED IN BOOK 62 M&P, PAGE 4, LOTS 1–68 AND COMMON AREAS "A", "B", AND "C" BEING A PORTION OF SECTION 7, TOWNSHIP 12 SOUTH, RANGE 14 EAST, G & S.R.M. TOWN OF ORO VALLEY, PIMA COUNTY, ARIZONA

MARCH 2022
WLB NO. 181057–G–E02
CONTOUR INTERVAL: 1' SCALE: N/A

REGISTERED LANDSCAPE ARCHITECT CERTIFICATE NO. 25621 GARY L. GRIZZLE Date Signed 3/30/22 ARIZONA U.S.A.

Call at least two full working days before you begin excavation. ARIZONA 811 Arizona Blue Stake, Inc. Dial 8-1-1 or 1-800-STAKE-IT (782-5348) In Maricopa County: (602) 263-1100

L1.1

REFERENCE CASE #'S:
0V1601351
0V115–027
0V914–008
0V914–007A
0V903–03A
(O)15–14

The WLB Group INC. **WLB**
Engineering Planning Surveying
Landscape Architecture Urban Design
Offices located in Tucson, Phoenix, Flagstaff, Arizona, and Las Vegas, Nevada
4444 East Broadway
Tucson, Arizona (520) 881-7480

Q:\181057\GE-01\02 Landscape\08 FLP\181057 la posada flp 06-L1.1_legend.dwg

PLANTING LEGEND

ZONING: R1-144
MERITAGE HOMES OF ARIZONA INC
APN 220-06-0590

PROJECT BOUNDARY

40' NATURAL BUFFERYARD

15' NATURAL BUFFERYARD

20' BUILDING SETBACK

ZONING: R1-144
MERITAGE HOMES OF ARIZONA INC
APN 220-06-0590

40' NATURAL BUFFERYARD

175' ROW

40.46'

S013'02"W

PROJECT BOUNDARY

40' NATURAL BUFFERYARD

OPEN SPACE

404 JURISDICTION WASH AREA (TYP)

PROPOSED 100-YR FLOODPLAIN

DEVELOPED AREA BOUNDARY

PROPOSED 100-YR FLOODPLAIN

DEVELOPED AREA BOUNDARY

OPEN SPACE

BLOCK 1
BK. 12, PG. 15
ZONING: R1-144

1ST AVENUE
(PUBLIC ROAD)
(DKT. 7571 PG. 800)

D.G. IN CURBWAY, TYP.

PROPOSED SIDEWALK, TYP.

DG, TYP.

DG, TYP.

SEWER LINE

WATER LINE

LIMIT OF D.G

D.G TO BACK OF CURB, TYP.

SVT 15x190

SVT 15x240

SVT 15x240

SVT 15x190

SVT 15x190

STREET 'B'
COMMON AREA 'A'
(PRIVATE STREET)

SVT 15x560

SVT 15x240

DG, TYP.

DG, TYP.

STORM DRAINS

ROCK PER CIVIL PLANS, TYP.

ENTRY MONUMENT

GRADING LIMIT, TYP.

PROPOSED CROSSING

FIRE HYDRANT

SVT 15x740

DG, TYP.

404 JURISDICTION WASH AREA (TYP)

PROPOSED STORM DRAIN

DG

SLOPE EASEMENT DKT. 7506 PG. 979

EXISTING STORM DRAIN

15' ENHANCED BUFFERYARD

LIMIT OF HYDROSEED AREA

404 JURISDICTION WASH AREA (TYP)

PROPOSED 100-YR FLOODPLAIN

DEVELOPED AREA BOUNDARY

OPEN SPACE

MATCHLINE, SEE SHEET L1.3

MATCHLINE, SEE SHEET L1.2

MATCHLINE, SEE SHEET L1.5

0' 40' 80' 120'

PLANTING PLAN

The WLB Group INC.

WLB

Engineering Planning Surveying
Landscape Architecture Urban Design
Offices located in Tucson, Phoenix,
Flagstaff, Arizona,
and Las Vegas, Nevada
4444 East Broadway
Tucson, Arizona (520) 881-7480

Q:\181057\GE-01\02 Landscape\08 FLP\181057 la posada flp 07-L1.2.dwg

Call at least two full working days before you begin excavation.
ARIZONA 811
Arizona Blue Stake, Inc.
Dial 8-1-1 or 1-800-STAKE-IT (782-5348)
In Maricopa County: (602) 263-1100

REGISTERED LANDSCAPE ARCHITECT
CERTIFICATE NO. 25621
GARY L. GRIZZLE
Date Signed 3/30/22
ARIZONA, U.S.A.

FINAL LANDSCAPE PLAN
LA POSADA AT PUSCH RIDGE
PHASE 1
(REVISION TO FINAL LANDSCAPE PLAN FOR NAKOMA SKY)
PHASES 1, 2, 3 AND FUTURE PHASES

ROONEY RANCH AREA Z RECORDED IN BOOK 62 M&P, PAGE 4, LOTS 1-68 AND COMMON AREAS "A", "B", AND "C" BEING A PORTION OF SECTION 7, TOWNSHIP 12 SOUTH, RANGE 14 EAST, G & S.R.M. TOWN OF ORO VALLEY, PIMA COUNTY, ARIZONA

MARCH 2022
WLB NO. 181057-G-E02
CONTOUR INTERVAL: 1' SCALE: 1"=40'

L1.2

REFERENCE CASE #'S:
0V1601351
0V115-027
0V914-008
0V914-007A
0V903-03A
(O)15-14

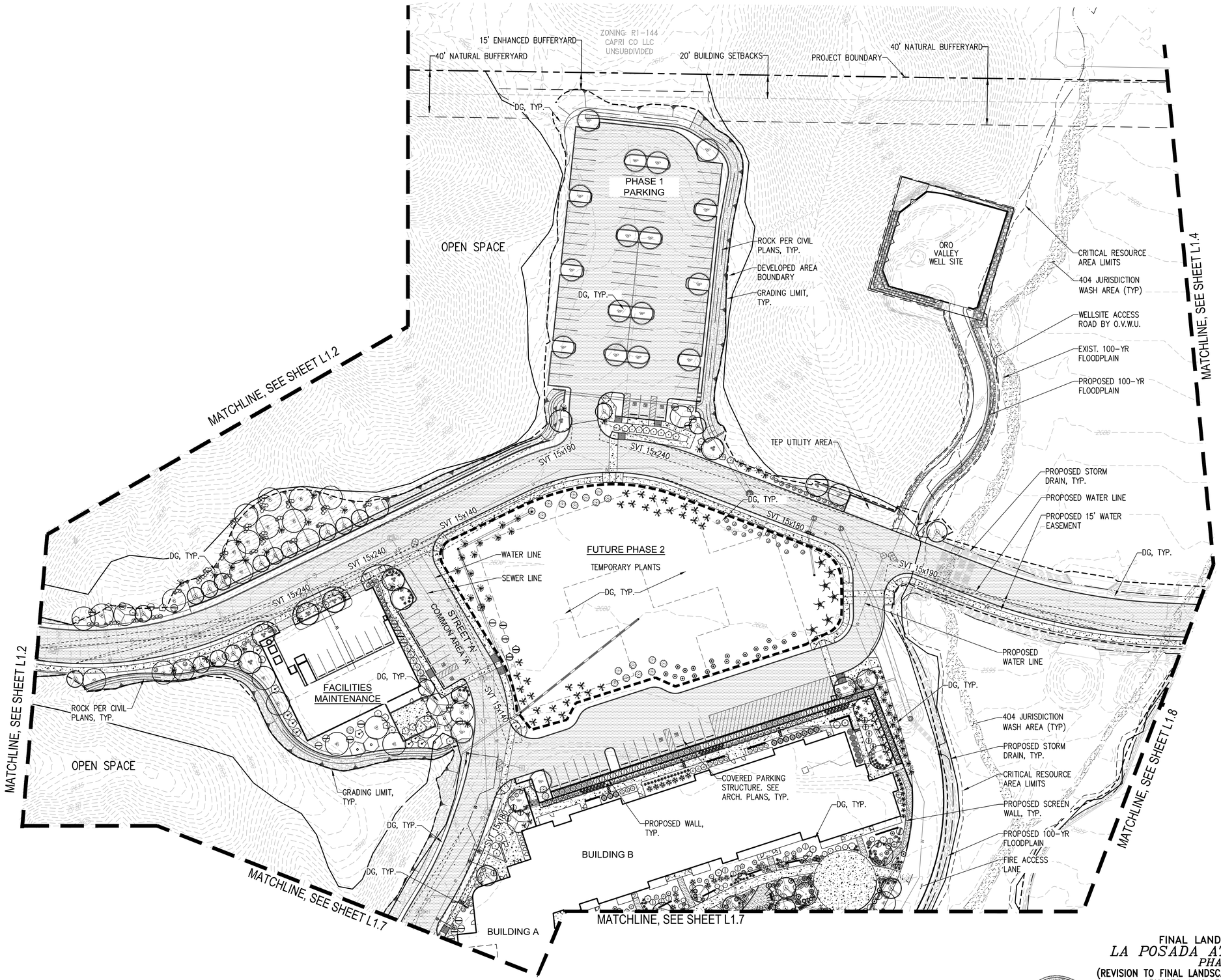

FINAL LANDSCAPE PLAN

LA POSADA AT PUSCH RIDGE

PHASE 1

(REVISION TO FINAL LANDSCAPE PLAN FOR NAKOMA SKY)

PHASES 1, 2, 3 AND FUTURE PHASES

ROONEY RANCH AREA Z RECORDED IN BOOK 62 M&P, PAGE 4, LOTS 1-68 AND COMMON AREAS "A", "B", AND "C" BEING A PORTION OF SECTION 7, TOWNSHIP 12 SOUTH, RANGE 14 EAST, G & S.R.M. TOWN OF ORO VALLEY, PIMA COUNTY, ARIZONA

MARCH 2022

WLB NO. 181057-G-E02

CONTOUR INTERVAL: 1' SCALE: 1"=40'

L1.3

REFERENCE CASE #'S:
0V1601351
0V115-027
0V914-008
0V914-007A
0V903-03A
(O)15-14

The WLB Group INC. **WLB**

Engineering Planning Surveying
Landscape Architecture Urban Design
Offices located in Tucson, Phoenix, Flagstaff, Arizona, and Las Vegas, Nevada
4444 East Broadway
Tucson, Arizona (520) 881-7480

0' 40' 80' 120'

Q:\181057\GE-01\02 Landscape\08 FLP\181057 la posada flp 08-L1.3.dwg

Call at least two full working days before you begin excavation.
ARIZONA 811
Arizona Blue Stake, Inc.
Dial 8-1-1 or 1-800-STAKE-IT (782-5348)
In Maricopa County: (602) 263-1100

REGISTERED LANDSCAPE ARCHITECT
CERTIFICATE NO. 25621
GARY L. GRIZZLE
Date Signed 3/30/22
ARIZONA, U.S.A.

LANDSCAPE PLAN

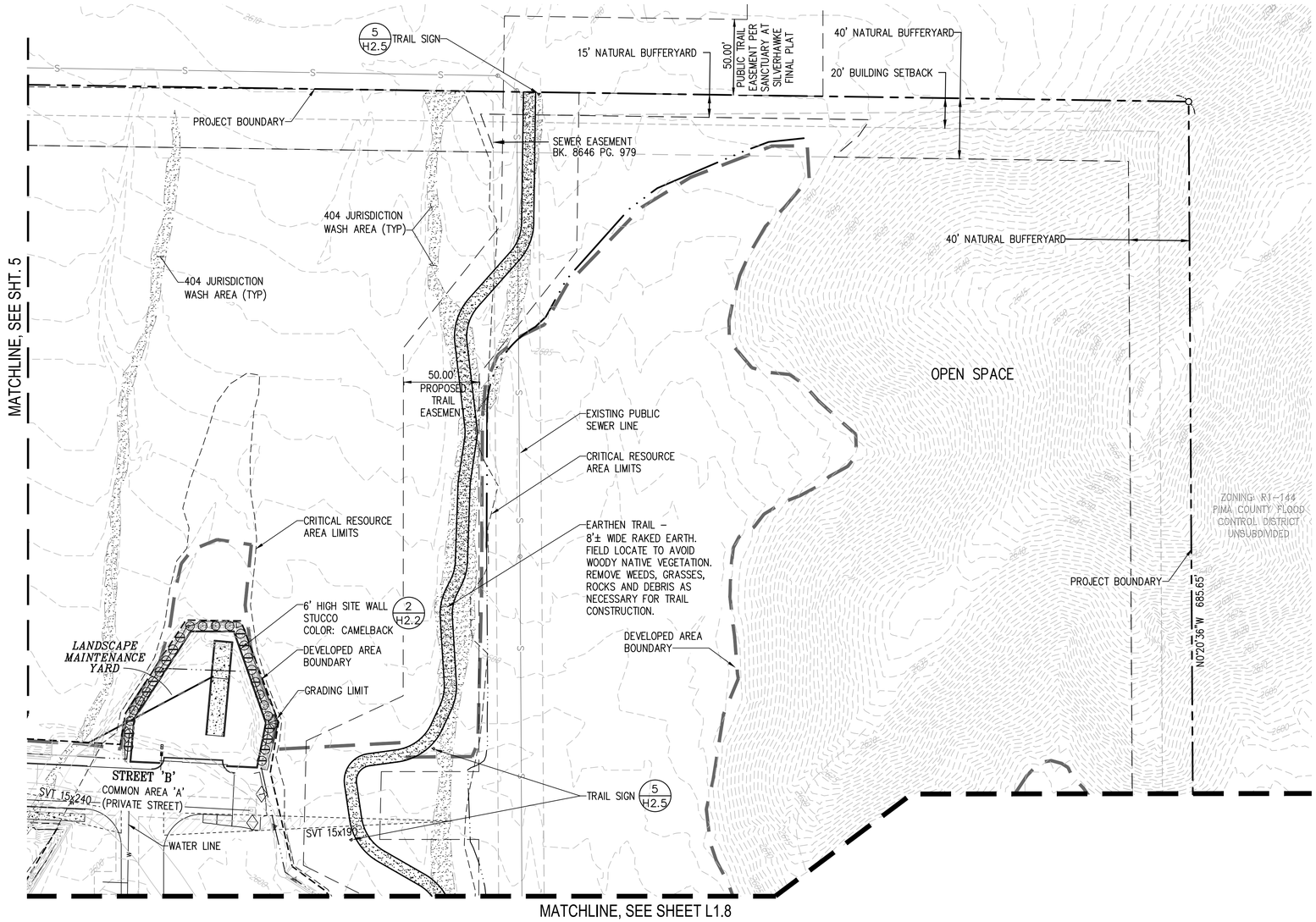

MATCHLINE, SEE SHEET L1.8

The WLB Group INC.

WLB

Engineering Planning Surveying
Landscape Architecture Urban Design
Offices located in Tucson, Phoenix,
Flagstaff, Arizona,
and Las Vegas, Nevada
4444 East Broadway
Tucson, Arizona (520) 881-7480

0' 40' 80' 120'

Q:\181057\GE-01\02 Landscape\08 FLP\181057 la posada flp 09-L1.4.dwg

LANDSCAPE PLAN

Call at least two full working days before you begin excavation.
ARIZONA 811
Arizona Blue Stake, Inc.
Dial 8-1-1 or 1-800-STAKE-IT (782-5348)
In Maricopa County: (602) 263-1100

REGISTERED LANDSCAPE ARCHITECT
CERTIFICATE NO.
25621
GARY L.
GRIZZLE
Date Signed 3/30/22
ARIZONA U.S.A.

FINAL LANDSCAPE PLAN
LA POSADA AT PUSCH RIDGE
PHASE 1
(REVISION TO FINAL LANDSCAPE PLAN FOR NAKOMA SKY)
PHASES 1, 2, 3 AND FUTURE PHASES

ROONEY RANCH AREA Z RECORDED IN BOOK 62 M&P, PAGE 4, LOTS 1–68 AND COMMON AREAS "A", "B", AND "C" BEING A PORTION OF SECTION 7, TOWNSHIP 12 SOUTH, RANGE 14 EAST, G & S.R.M. TOWN OF ORO VALLEY, PIMA COUNTY, ARIZONA

MARCH 2022
WLB NO. 181057–G–E02
CONTOUR INTERVAL: 1' SCALE: 1"=40'

L1.4

REFERENCE CASE #'S:
0V1601351
0V115–027
0V914–008
0V914–007A
0V903–03A
(0)15–14

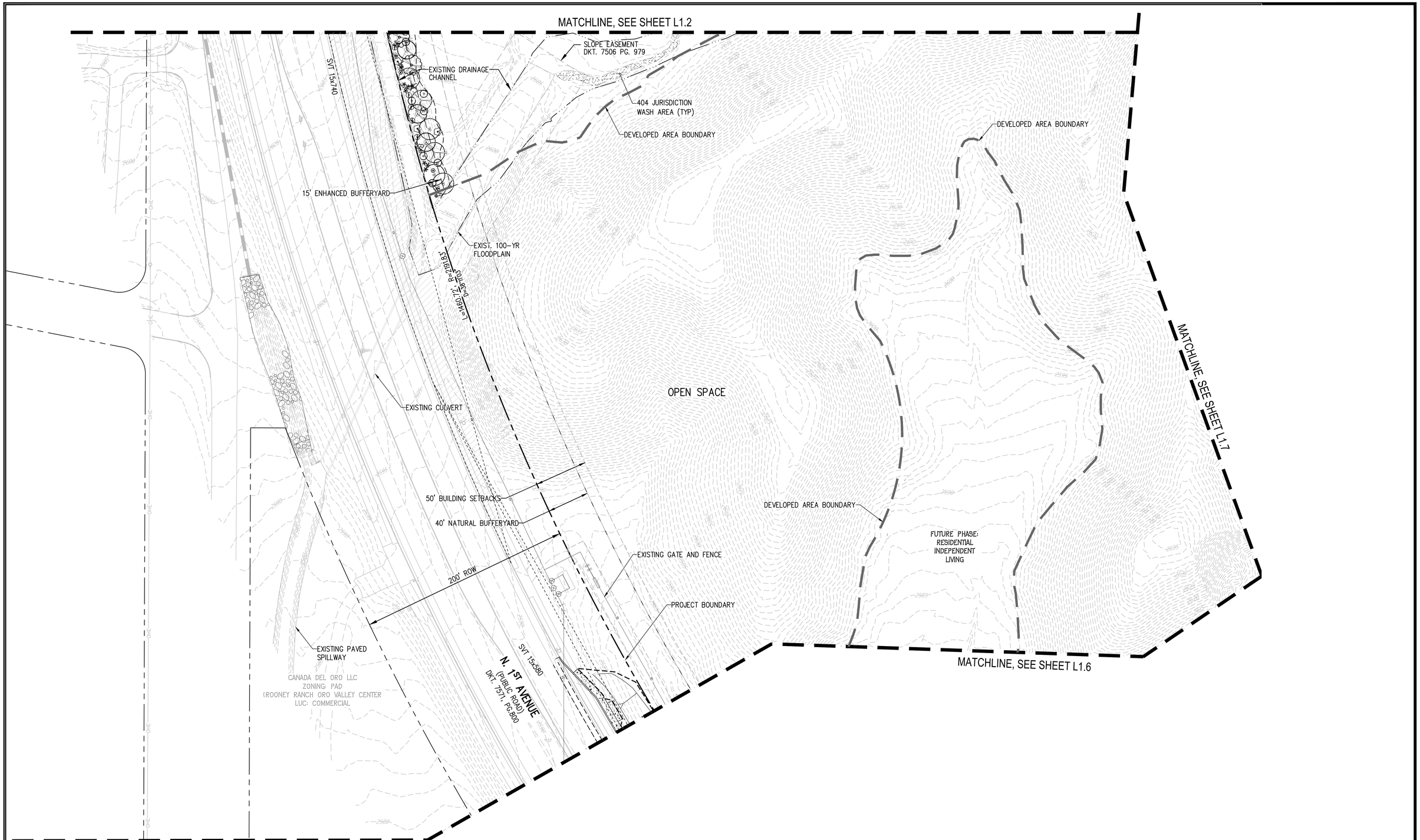

The WLB Group INC.

WLB

Engineering Planning Surveying
Landscape Architecture Urban Design
Offices located in Tucson, Phoenix, Flagstaff, Arizona, and Las Vegas, Nevada
4444 East Broadway
Tucson, Arizona (520) 881-7480

0' 40' 80' 120'

Q:\181057\GE-01\02 Landscape\08 FLP\181057 la posada flp 10-L1.5.dwg

LANDSCAPE PLAN

Call at least two full working days before you begin excavation
ARIZONA 811
Arizona Blue Stake, Inc.
Dial 8-1-1 or 1-800-STAKE-IT (782-5348)
In Maricopa County: (602) 263-1100

REGISTERED LANDSCAPE ARCHITECT
CERTIFICATE NO.
25621
GARY L. GRIZZLE
3/30/22
Date Signed
ARIZONA, U.S.A.

FINAL LANDSCAPE PLAN
LA POSADA AT PUSCH RIDGE
PHASE 1
(REVISION TO FINAL LANDSCAPE PLAN FOR NAKOMA SKY)
PHASES 1, 2, 3 AND FUTURE PHASES

ROONEY RANCH AREA Z RECORDED IN BOOK 62 M&P, PAGE 4, LOTS 1–68 AND COMMON AREAS "A", "B", AND "C" BEING A PORTION OF SECTION 7, TOWNSHIP 12 SOUTH, RANGE 14 EAST, G & S.R.M. TOWN OF ORO VALLEY, PIMA COUNTY, ARIZONA

MARCH 2022
WLB NO. 181057–G–E02
CONTOUR INTERVAL: 1' SCALE: 1"=40'

L1.5

REFERENCE CASE #'S:
0V1601351
0V115–027
0V914–008
0V914–007A
0V903–03A
(O)15–14

MATCHLINE, SEE SHEET L1.5

MATCHLINE, SEE SHEET L1.7

DEVELOPED AREA BOUNDARY

FUTURE PHASE: COMMERCIAL

OPEN SPACE

CROSSWALK

PROPOSED SIDEWALK

DG IN CURBWAY, TYP.

DG IN MEDIANS, TYP.

DG, TYP.

DG IN MEDIAN

DG, TYP.

PUBLIC ART

PROPOSED SEWER EASEMENT

DG TO BACK OF CURB, TYP.

15' ENHANCED BUFFERYARD

ENTRY MONUMENT WALL

EXISTING DRAINAGE STRUCTURE

STREET 'A'
COMMON AREA 'A'
(PRIVATE STREET)

SVT 15x240

SVT 15x190

SVT 15x190

SVT 15x240

EXISTING SEWER PER G-89-23

SEWER EASEMENT BK. 8646 PG. 979 TO BE PARTIALLY ABANDONED BY SEPARATE INSTRUMENT

PROPOSED 10' WIDE MULTI-USE PATH

PROPOSED WATER LINE

DG TYP.

DEVELOPED AREA BOUNDARY

PUBLIC TRAILHEAD SEE SHEET H1.6

PROPOSED 10' WIDE MULTI-USE PATH

BICYCLE PARKING

DG TYP.

OPEN SPACE LIMITS

EXISTING 16' WIDE MULTI-USE PATH

EXISTING LIGHT POLE, TYP.

SVT 15x580

EXISTING STORM DRAIN

EXISTING WATER LINE

ENTRY MONUMENT / WALL

DECORATIVE ROCK SEE HARDSCAPE PLANS

CANADA DEL ORO WASH
(DKT. 7571, PG. 800)
ZONING: PAD
PIMA COUNTY
UNSUBDIVIDED

PROPOSED SEWER LINE

PROPOSED WATER LINE

DG, TYP.

OPEN SPACE

FUTURE PHASE: COMMERCIAL

DEVELOPED AREA BOUNDARY

N52°01'58"E 997.27'

DG, TYP.

30' x 50' DRAINAGE EASEMENT

SVT 15x140

E LAMBERT LANE
(PUBLIC ROAD)
DKT. 7571, PG.800

15' ENHANCED BUFFERYARD

DG, TO BACK OF CURB, TYP.

PROPOSED DRAINAGE EASMENT

N. 1ST AVENUE
(PUBLIC ROAD)
DKT. 7571, PG.800

200' ROW

PROJECT BOUNDARY

50' BUILDING SETBACK

S37°55'12"E 428.74'

N52°01'58"E 340.45'

40' NATURAL BUFFERYARD

50' NATURAL BUFFERYARD

EXISTING CULVERT

50' BUILDING SETBACK

PROJECT BOUNDARY

CANADA DEL ORO LLC
ZONING: PAD
(ROONEY RANCH ORO VALLEY CENTER
LUC: COMMERCIAL

EXISTING SOIL CEMENT BANK PROTECTION

The WLB Group INC. **WLB**

Engineering Planning Surveying
Landscape Architecture Urban Design
Offices located in Tucson, Phoenix, Flagstaff, Arizona, and Las Vegas, Nevada
4444 East Broadway
Tucson, Arizona (520) 881-7480

0' 40' 80' 120'

Q:\181057\GE-01\02 Landscape\08 FLP\181057 la posada flp 11-L1.6.dwg

PLANTING PLAN

Call at least two full working days before you begin excavation.
ARIZONA 811
Arizona Blue Stake, Inc.
Dial 8-1-1 or 1-800-STAKE-IT (782-5348)
In Maricopa County: (602) 263-1100

REGISTERED LANDSCAPE ARCHITECT
CERTIFICATE NO. 25621
GARY L. GRIZZLE
Date Signed 3/30/22
ARIZONA U.S.A.

FINAL LANDSCAPE PLAN
LA POSADA AT PUSCH RIDGE
PHASE 1
(REVISION TO FINAL LANDSCAPE PLAN FOR NAKOMA SKY)
PHASES 1, 2, 3 AND FUTURE PHASES

ROONEY RANCH AREA Z RECORDED IN BOOK 62 M&P, PAGE 4, LOTS 1–68 AND COMMON AREAS "A", "B", AND "C" BEING A PORTION OF SECTION 7, TOWNSHIP 12 SOUTH, RANGE 14 EAST, G & S.R.M. TOWN OF ORO VALLEY, PIMA COUNTY, ARIZONA

MARCH 2022
WLB NO. 181057–G–E02
CONTOUR INTERVAL: 1' SCALE: 1"=40'

L1.6

REFERENCE CASE #'S:
OV1601351
OV115–027
OV914–008
OV914–007A
OV903–03A
(O)15–14

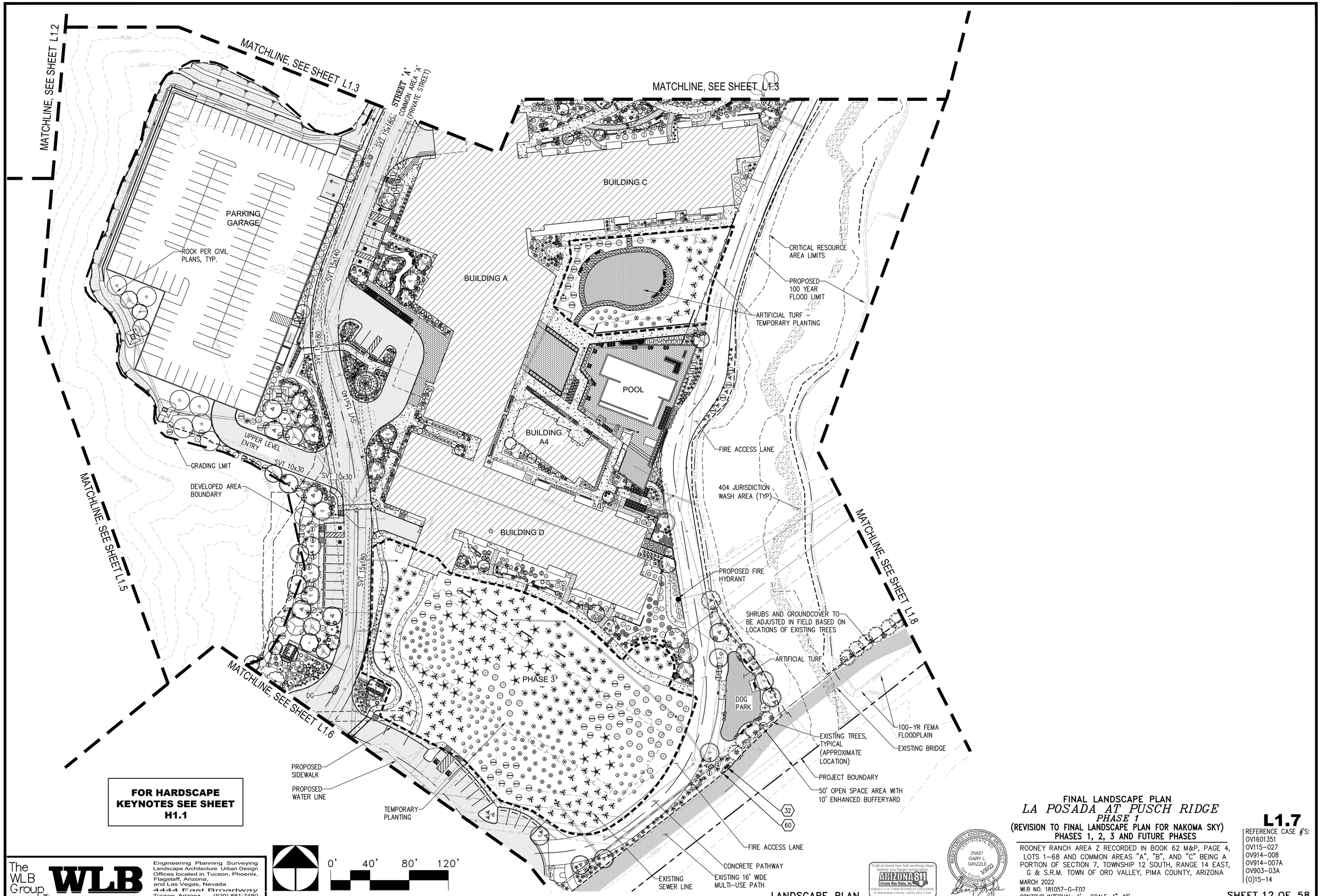

FOR HARDSCAPE KEYNOTES SEE SHEET H1.1

LANDSCAPE PLAN

The WLB Group INC.
WLB
Engineering Planning Surveying
Landscape Architecture Urban Design
Offices located in Tucson, Phoenix, Flagstaff, Arizona, and Las Vegas, Nevada
4444 East Broadway
Tucson, Arizona (520) 881-7480

Q:\181057\GE-01\02 Landscape\08 FLP\181057 la posada flp 12-L1.7.dwg

Call at least two full working days before you begin excavation.
ARIZONA 811
Arizona Blue Stake, Inc.
Dial 8-1-1 or 1-800-STAKE-IT (782-5348)
in Maricopa County: (602) 263-1100

REGISTERED LANDSCAPE ARCHITECT
CERTIFICATE NO. 25621
GARY L. GRIZZLE
Date Signed 3/30/22
ARIZONA U.S.A.

FINAL LANDSCAPE PLAN
LA POSADA AT PUSCH RIDGE
PHASE 1
(REVISION TO FINAL LANDSCAPE PLAN FOR NAKOMA SKY)
PHASES 1, 2, 3 AND FUTURE PHASES

ROONEY RANCH AREA Z RECORDED IN BOOK 62 M&P, PAGE 4, LOTS 1–68 AND COMMON AREAS "A", "B", AND "C" BEING A PORTION OF SECTION 7, TOWNSHIP 12 SOUTH, RANGE 14 EAST, G & S.R.M. TOWN OF ORO VALLEY, PIMA COUNTY, ARIZONA

MARCH 2022
W.B NO. 181057–G–F02
CONTOUR INTERVAL: 1' SCALE: 1"=40'

L1.7

REFERENCE CASE #'S:
OV1601351
OV115–027
OV914–008
OV914–007A
OV903–03A
(O)15–14

MATCHLINE, SEE SHEET L1.4

MATCHLINE, SEE SHEET L1.3

MATCHLINE, SEE SHEET L1.7

50.00' PROPOSED TRAIL EASEMENT

DEVELOPED AREA BOUNDARY

EXISTING 16' WIDE MULTI-USE PATH

ZONING: R1-144
PIMA COUNTY FLOOD CONTROL DISTRICT
UNSUBDIVIDED

PROJECT BOUNDARY

FUTURE PHASE: RESIDENTIAL INDEPENDENT LIVING

CRITICAL RESOURCE AREA LIMITS

PROPOSED 100-YR FLOODPLAIN

EARTHEN TRAIL – 8'± WIDE RAKED EARTH. FIELD LOCATE TO AVOID WOODY NATIVE VEGETATION. REMOVE WEEDS, GRASSES, ROCKS AND DEBRIS AS NECESSARY FOR TRAIL CONSTRUCTION.

SEWER EASEMENT BK. 8646 PG. 979 TO BE PARTIALLY ABANDONED BY SEPARATE INSTRUMENT

FUTURE PHASE

31

50' NATURAL BUFFERYARD

100-YR FEMA FLOODPLAIN

32

60

50' OPEN SPACE AREA WITH 10' ENHANCED BUFFERYARD

CRITICAL RESOURCE AREA LIMITS

404 JURISDICTION WASH AREA (TYP)

TRAIL SIGN 5 H2.5

RAMP

ACCESS RAMP

50' BUILDING SETBACK

MAINTENANCE ACCESS ROAD

EXISTING TREES, TYPICAL (APPROXIMATE LOCATION)

SHRUBS AND GROUNDCOVER TO BE ADJUSTED IN FIELD BASED ON LOCATIONS OF EXISTING TREES

CANADA DEL ORO WASH
(DKT. 7571, PG. 800)
ZONING: PAD
PIMA COUNTY
UNSUBDIVIDED

N56°30'00"E 887.96'

31

32

60

EXISTING SEWER PER G-89-23

SEWER EASEMENT BK. 8646 PG. 979 TO BE PARTIALLY ABANDONED BY SEPARATE INSTRUMENT

PROJECT BOUNDARY

50' OPEN SPACE AREA WITH 10' ENHANCED BUFFERYARD

DEVELOPED 100-YR FEMA FLOODPLAIN

CAÑADA DEL ORO WASH

FOR HARDSCAPE KEYNOTES SEE SHEET H1.1

0' 40' 80' 120'

The WLB Group INC.

WLB

Engineering Planning Surveying
Landscape Architecture Urban Design
Offices located in Tucson, Phoenix, Flagstaff, Arizona, and Las Vegas, Nevada
4444 East Broadway
Tucson, Arizona (520) 881-7480

Q:\181057\GE-01\02 Landscape\08 FLP\181057 la posada flp 13-L1.8.dwg

Call at least two full working days before you begin excavation.
ARIZONA 811
Arizona Blue Stake, Inc.
Dial 8-1-1 or 1-800-STAKE-IT (782-5348)
In Maricopa County: (602) 263-1100

REGISTERED LANDSCAPE ARCHITECT
CERTIFICATE NO.
25621
GARY L. GRIZZLE
Date Signed 3/30/23
ARIZONA U.S.A.

PLANTING PLAN

FINAL LANDSCAPE PLAN
LA POSADA AT PUSCH RIDGE
PHASE 1
(REVISION TO FINAL LANDSCAPE PLAN FOR NAKOMA SKY)
PHASES 1, 2, 3 AND FUTURE PHASES

ROONEY RANCH AREA Z RECORDED IN BOOK 62 M&P, PAGE 4, LOTS 1–68 AND COMMON AREAS "A", "B", AND "C" BEING A PORTION OF SECTION 7, TOWNSHIP 12 SOUTH, RANGE 14 EAST, G & S.R.M. TOWN OF ORO VALLEY, PIMA COUNTY, ARIZONA

MARCH 2022
WLB NO. 181057-G-E02
CONTOUR INTERVAL: 1' SCALE: 1"=40'

L1.8

REFERENCE CASE #'S:
OV1601351
OV115-027
OV914-008
OV914-007A
OV903-03A
(O)15-14

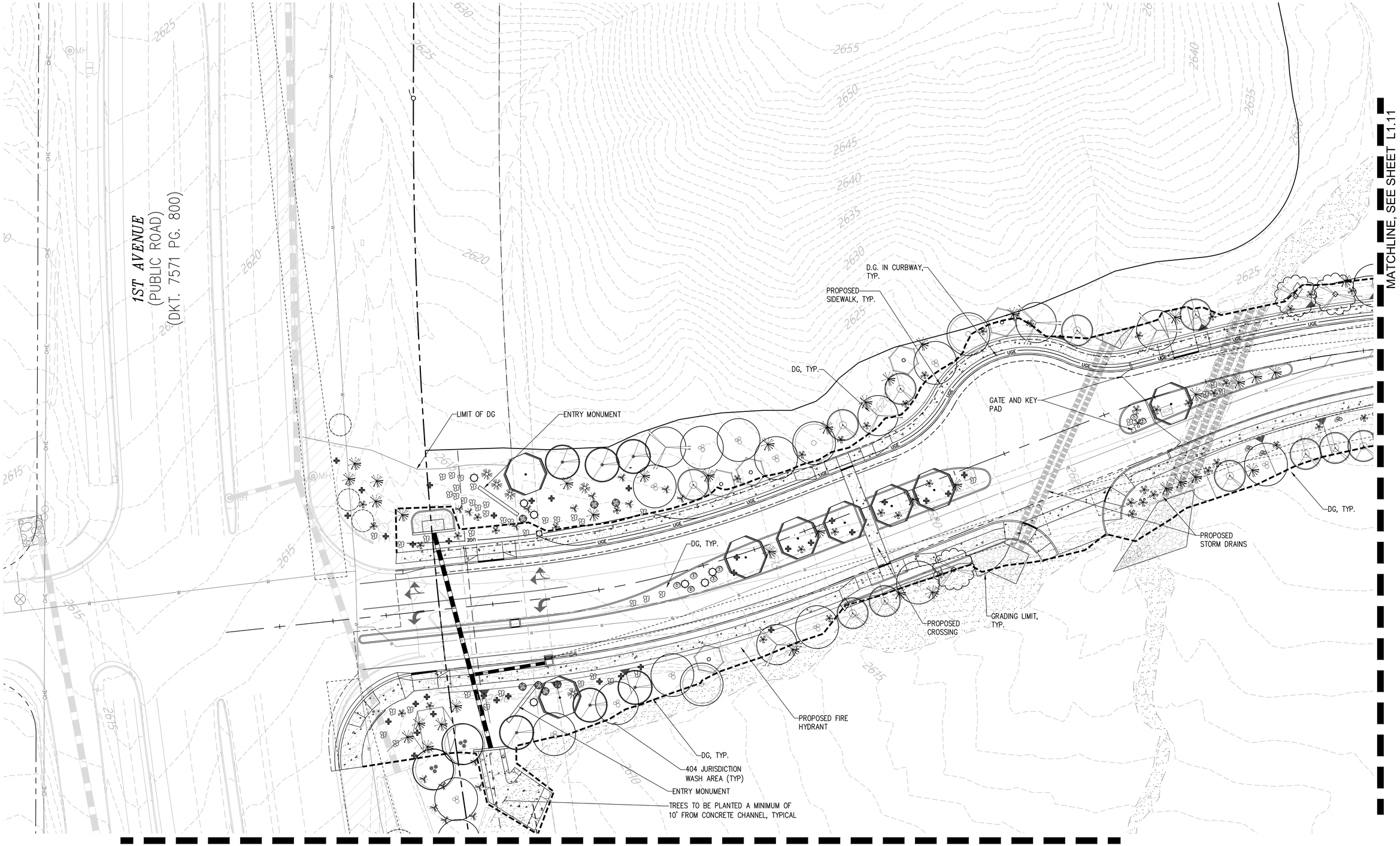

FINAL LANDSCAPE PLAN
LA POSADA AT PUSCH RIDGE
PHASE 1
(REVISION TO FINAL LANDSCAPE PLAN FOR NAKOMA SKY)
PHASES 1, 2, 3 AND FUTURE PHASES

ROONEY RANCH AREA Z RECORDED IN BOOK 62 M&P, PAGE 4, LOTS 1–68 AND COMMON AREAS "A", "B", AND "C" BEING A PORTION OF SECTION 7, TOWNSHIP 12 SOUTH, RANGE 14 EAST, G & S.R.M. TOWN OF ORO VALLEY, PIMA COUNTY, ARIZONA

MARCH 2022
WLB NO. 181057–G–E02
CONTOUR INTERVAL: 1' SCALE: 1"=20'

L1.9

REFERENCE CASE #'S:
OV1601351
OV115–027
OV914–008
OV914–007A
OV903–03A
(O)15–14

The WLB Group INC.
WLB
Engineering Planning Surveying
Landscape Architecture Urban Design
Offices located in Tucson, Phoenix, Flagstaff, Arizona, and Las Vegas, Nevada
4444 East Broadway
Tucson, Arizona (520) 881-7480

0' 20' 40' 60'

Q:\181057\GE-01\02 Landscape\08 FLP\181057 la posada flp 14-L1.9 plant 20 scale.dwg

THIS SHEET FOR CONTRACTOR INFORMATION PURPOSES

PLANTING PLAN

Call at least two full working days before you begin excavation
ARIZONA 811
Arizona Blue Stake, Inc.
Dial 8-1-1 or 1-800-STAKE-IT (782-5348)
In Maricopa County: (602) 263-1100

REGISTERED LANDSCAPE ARCHITECT
CERTIFICATE NO. 25621
GARY L. GRIZZLE
Date Signed 3/30/22
ARIZONA, U.S.A.

MATCHLINE, SEE SHEET L1.9

The WLB Group INC.

WLB

Engineering Planning Surveying
Landscape Architecture Urban Design
Offices located in Tucson, Phoenix, Flagstaff, Arizona, and Las Vegas, Nevada
4444 East Broadway
Tucson, Arizona (520) 881-7480

0' 20' 40' 60'

Q:\181057\GE-01\02 Landscape\08 FLP\181057 la posada flp 15-L1.10 plant 20 scale.dwg

THIS SHEET FOR CONTRACTOR INFORMATION PURPOSES

PLANTING PLAN

Call at least two full working days before you begin excavation.
ARIZONA 811
Arizona Blue Stake, Inc.
Dial 8-1-1 or 1-800-STAKE-IT (782-5348)
In Maricopa County: (602) 263-1100

REGISTERED LANDSCAPE ARCHITECT
CERTIFICATE NO. 25621
GARY L. GRIZZLE
Date Signed 3/30/22
ARIZONA, U.S.A.

FINAL LANDSCAPE PLAN
LA POSADA AT PUSCH RIDGE
PHASE 1
(REVISION TO FINAL LANDSCAPE PLAN FOR NAKOMA SKY)
PHASES 1, 2, 3 AND FUTURE PHASES

ROONEY RANCH AREA Z RECORDED IN BOOK 62 M&P, PAGE 4, LOTS 1–68 AND COMMON AREAS "A", "B", AND "C" BEING A PORTION OF SECTION 7, TOWNSHIP 12 SOUTH, RANGE 14 EAST, G & S.R.M. TOWN OF ORO VALLEY, PIMA COUNTY, ARIZONA

MARCH 2022
WLB NO. 181057–G–E02
CONTOUR INTERVAL: 1' SCALE: 1"=20'

L1.10

REFERENCE CASE #'S:
OV1601351
OV115–027
OV914–008
OV914–007A
OV903–03A
(O)15–14

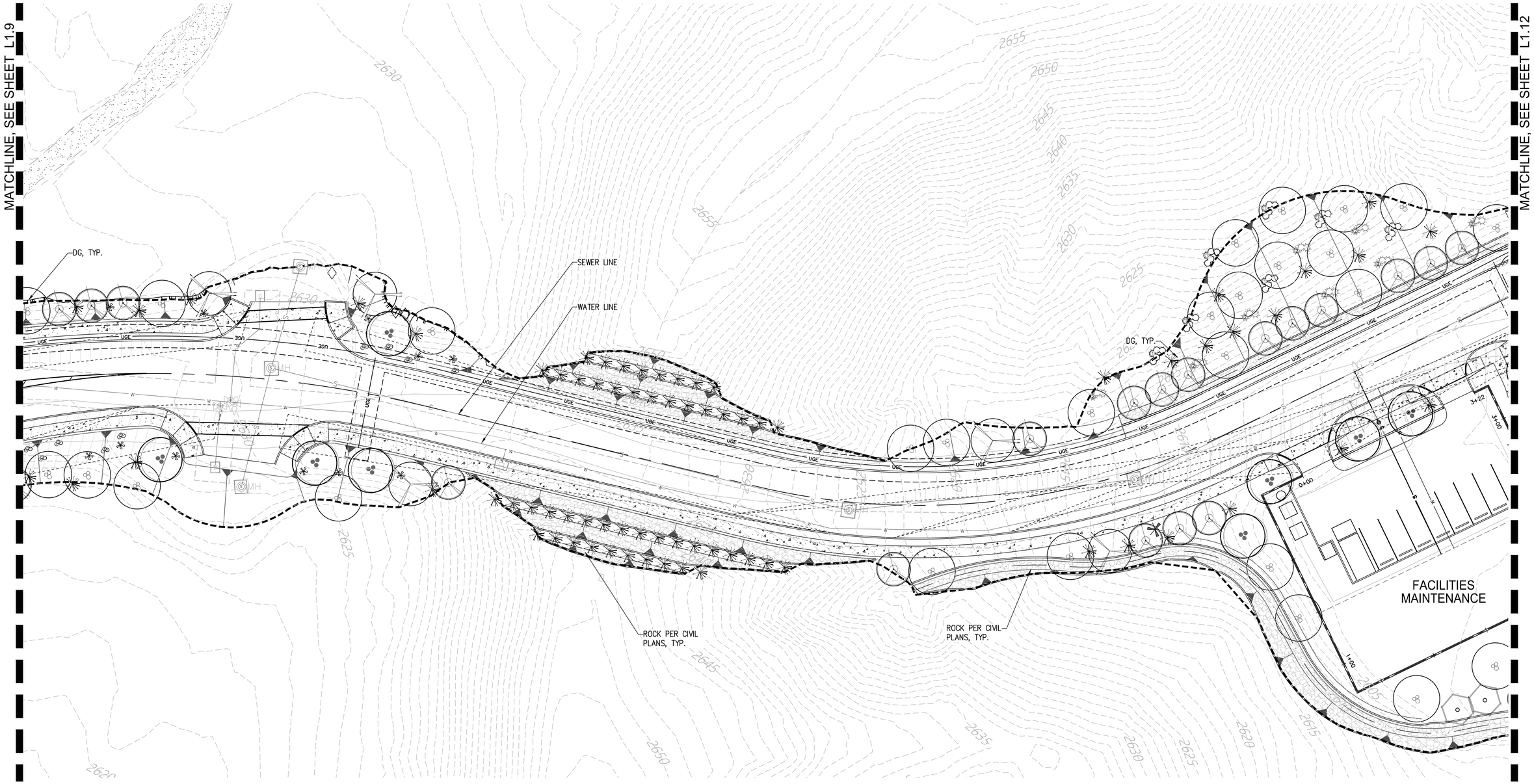

The WLB Group INC.

WLB

Engineering Planning Surveying
Landscape Architecture Urban Design
Offices located in Tucson, Phoenix, Flagstaff, Arizona, and Las Vegas, Nevada
4444 East Broadway
Tucson, Arizona (520) 881-7480

0' 20' 40' 60'

Q:\181057\GE-01\02 Landscape\08 FLP\181057 la posada flp 16-L1.11 plant 20 scale.dwg

THIS SHEET FOR CONTRACTOR INFORMATION PURPOSES

PLANTING PLAN

Call at least two full working days before you begin excavation.
ARIZONA 811
Arizona Blue Stake, Inc.
Dial 8-1-1 or 1-800-STAKE-IT (782-5348)
In Maricopa County: (602) 263-1100

REGISTERED LANDSCAPE ARCHITECT
CERTIFICATE NO. 25621
GARY L. GRIZZLE
Date Signed 3/30/22
ARIZONA, U.S.A.

FINAL LANDSCAPE PLAN
LA POSADA AT PUSCH RIDGE
PHASE 1
(REVISION TO FINAL LANDSCAPE PLAN FOR NAKOMA SKY)
PHASES 1, 2, 3 AND FUTURE PHASES

ROONEY RANCH AREA Z RECORDED IN BOOK 62 M&P, PAGE 4, LOTS 1–68 AND COMMON AREAS "A", "B", AND "C" BEING A PORTION OF SECTION 7, TOWNSHIP 12 SOUTH, RANGE 14 EAST, G & S.R.M. TOWN OF ORO VALLEY, PIMA COUNTY, ARIZONA

MARCH 2022
WLB NO. 181057–G–E02
CONTOUR INTERVAL: 1' SCALE: 1"=20'

L1.11

REFERENCE CASE #'S:
OV1601351
OV115–027
OV914–008
OV914–007A
OV903–03A
(O)15–14

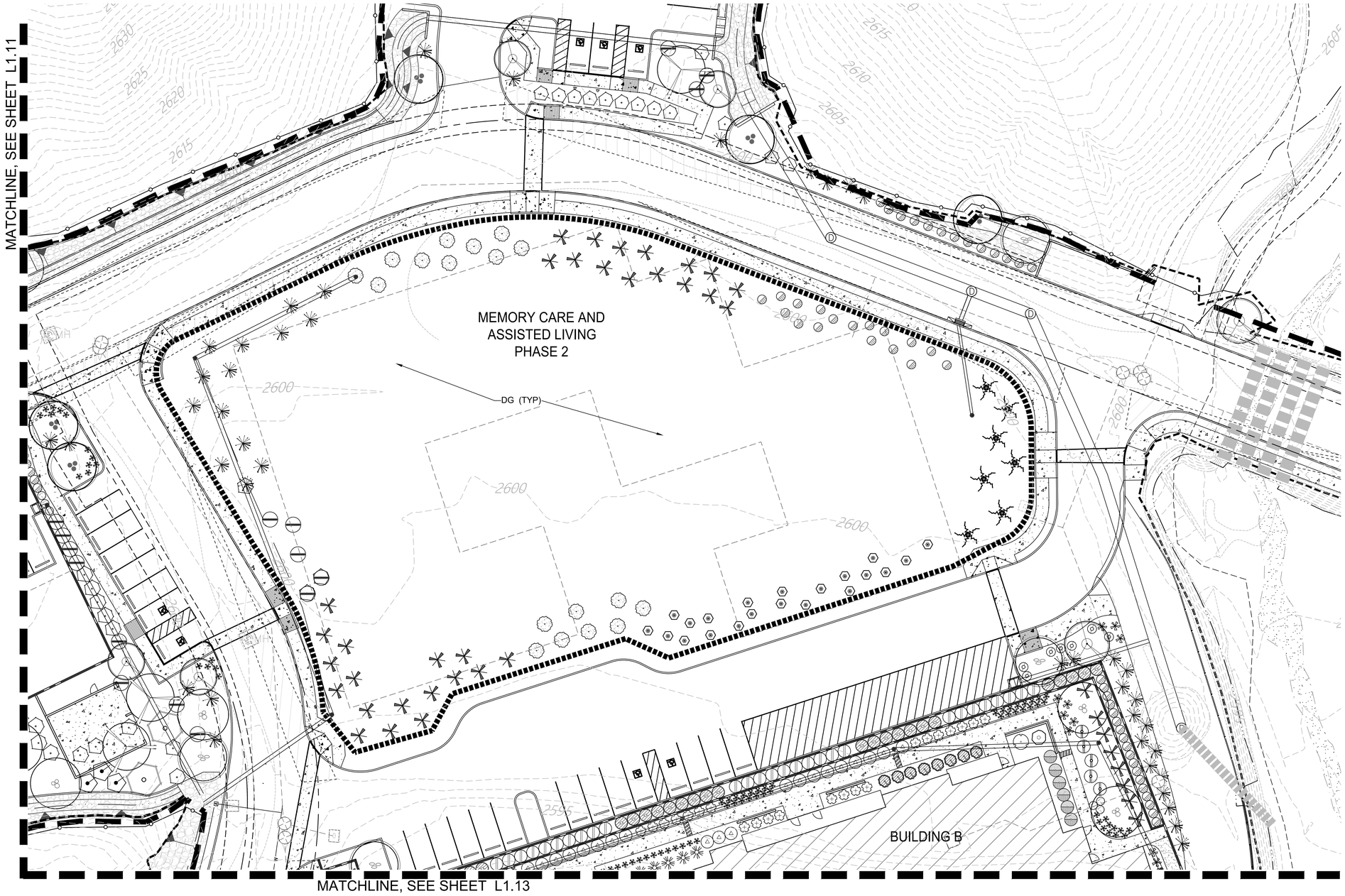

FINAL LANDSCAPE PLAN

LA POSADA AT PUSCH RIDGE

PHASE 1

(REVISION TO FINAL LANDSCAPE PLAN FOR NAKOMA SKY)

PHASES 1, 2, 3 AND FUTURE PHASES

ROONEY RANCH AREA Z RECORDED IN BOOK 62 M&P, PAGE 4, LOTS 1–68 AND COMMON AREAS "A", "B", AND "C" BEING A PORTION OF SECTION 7, TOWNSHIP 12 SOUTH, RANGE 14 EAST, G & S.R.M. TOWN OF ORO VALLEY, PIMA COUNTY, ARIZONA

MARCH 2022

WLB NO. 181057–G–E02

CONTOUR INTERVAL: 1' SCALE: 1"=20'

L1.12

REFERENCE CASE #'S:
OV1601351
OV115–027
OV914–008
OV914–007A
OV903–03A
(O)15–14

The WLB Group INC.
WLB
Engineering Planning Surveying
Landscape Architecture Urban Design
Offices located in Tucson, Phoenix, Flagstaff, Arizona, and Las Vegas, Nevada
4444 East Broadway
Tucson, Arizona (520) 881-7480

0' 20' 40' 60'

Q:\181057\GE-01\02 Landscape\08 FLP\181057 la posada flp 17-L1.12 plant 20 scale.dwg

THIS SHEET FOR CONTRACTOR INFORMATION PURPOSES

PLANTING PLAN

Call at least two full working days before you begin excavation.
ARIZONA 811
Arizona Blue Stake, Inc.
Dial 8-1-1 or 1-800-STAKE-IT (782-5348)
In Maricopa County: (602) 263-1100

REGISTERED LANDSCAPE ARCHITECT
CERTIFICATE NO. 25621
GARY L. GRIZZLE
Date Signed 3/30/22
ARIZONA U.S.A.

MATCHLINE, SEE SHEET L1.12

BUILDING B

BUILDING A

BUILDING C

PARKING GARAGE

FUTURE PHASE 3 BUILDING

DG (TYP)

TEMPORARY PLANTING, ARTIFICIAL TURF, BENCHES

FIRE ACCESS LANE

POOL

MATCHLINE, SEE SHEET L1.14

FINAL LANDSCAPE PLAN

LA POSADA AT PUSCH RIDGE

PHASE 1

(REVISION TO FINAL LANDSCAPE PLAN FOR NAKOMA SKY)

PHASES 1, 2, 3 AND FUTURE PHASES

ROONEY RANCH AREA Z RECORDED IN BOOK 62 M&P, PAGE 4, LOTS 1–68 AND COMMON AREAS "A", "B", AND "C" BEING A PORTION OF SECTION 7, TOWNSHIP 12 SOUTH, RANGE 14 EAST, G & S.R.M. TOWN OF ORO VALLEY, PIMA COUNTY, ARIZONA

MARCH 2022

WLB NO. 181057–G–E02

CONTOUR INTERVAL: 1' SCALE: 1"=20'

L1.13

REFERENCE CASE #'S:
0V1601351
0V115–027
0V914–008
0V914–007A
0V903–03A
(0)15–14

The WLB Group INC.

WLB

Engineering Planning Surveying
Landscape Architecture Urban Design
Offices located in Tucson, Phoenix, Flagstaff, Arizona, and Las Vegas, Nevada
4444 East Broadway
Tucson, Arizona (520) 881-7480

0' 20' 40' 60'

Q:\181057\GE-01\02 Landscape\08 FLP\181057 la posada flp 18-L1.13 plant_20 scale.dwg

THIS SHEET FOR CONTRACTOR INFORMATION PURPOSES

PLANTING PLAN

Call at least two full working days before you begin excavation
ARIZONA 811
Arizona Blue Stake, Inc.
Dial 8-1-1 or 1-800-STAKE-IT (782-5348)
In Maricopa County: (602) 263-1100

REGISTERED LANDSCAPE ARCHITECT
CERTIFICATE NO.
25621
GARY L. GRIZZLE
3/30/22
Date Signed
ARIZONA U.S.A.

MATCHLINE, SEE SHEET L1.13

BUILDING A

POOL

BUILDING A4

OPEN SPACE

ARTIFICIAL TURF

BUILDING D

FIRE ACCESS LANE

ARTIFICIAL TURF

SHRUBS AND GROUNDCOVER TO BE ADJUSTED IN FIELD BASED ON LOCATIONS OF EXISTING TREES, TYPICAL

FUTURE BUILDING F

TEMPORARY PLANTING

DG (TYP)

MATCHLINE, SEE SHEET L1.15

MATCHLINE, SEE SHEET L1.17

The WLB Group INC.

WLB

Engineering Planning Surveying
Landscape Architecture Urban Design
Offices located in Tucson, Phoenix, Flagstaff, Arizona, and Las Vegas, Nevada
4444 East Broadway
Tucson, Arizona (520) 881-7480

0' 20' 40' 60'

Q:\181057\GE-01\02 Landscape\08 FLP\181057 la posada flp 19-L1.14 plant 20 scale.dwg

THIS SHEET FOR CONTRACTOR INFORMATION PURPOSES

PLANTING PLAN

Call at least two full working days before you begin excavation.
ARIZONA 811
Arizona Blue Stake, Inc.
Dial 8-1-1 or 1-800-STAKE-IT (782-5348)
In Maricopa County: (602) 263-1100

REGISTERED LANDSCAPE ARCHITECT
CERTIFICATE NO. 25621
GARY L. GRIZZLE
Date Signed 3/30/22
ARIZONA U.S.A.

FINAL LANDSCAPE PLAN
LA POSADA AT PUSCH RIDGE
PHASE 1
(REVISION TO FINAL LANDSCAPE PLAN FOR NAKOMA SKY)
PHASES 1, 2, 3 AND FUTURE PHASES

ROONEY RANCH AREA Z RECORDED IN BOOK 62 M&P, PAGE 4, LOTS 1–68 AND COMMON AREAS "A", "B", AND "C" BEING A PORTION OF SECTION 7, TOWNSHIP 12 SOUTH, RANGE 14 EAST, G & S.R.M. TOWN OF ORO VALLEY, PIMA COUNTY, ARIZONA

MARCH 2022
WLB NO. 181057–G–E02
CONTOUR INTERVAL: 1' SCALE: 1"=20'

L1.14

REFERENCE CASE #'S:
0V1601351
0V115–027
0V914–008
0V914–007A
0V903–03A
(0)15–14

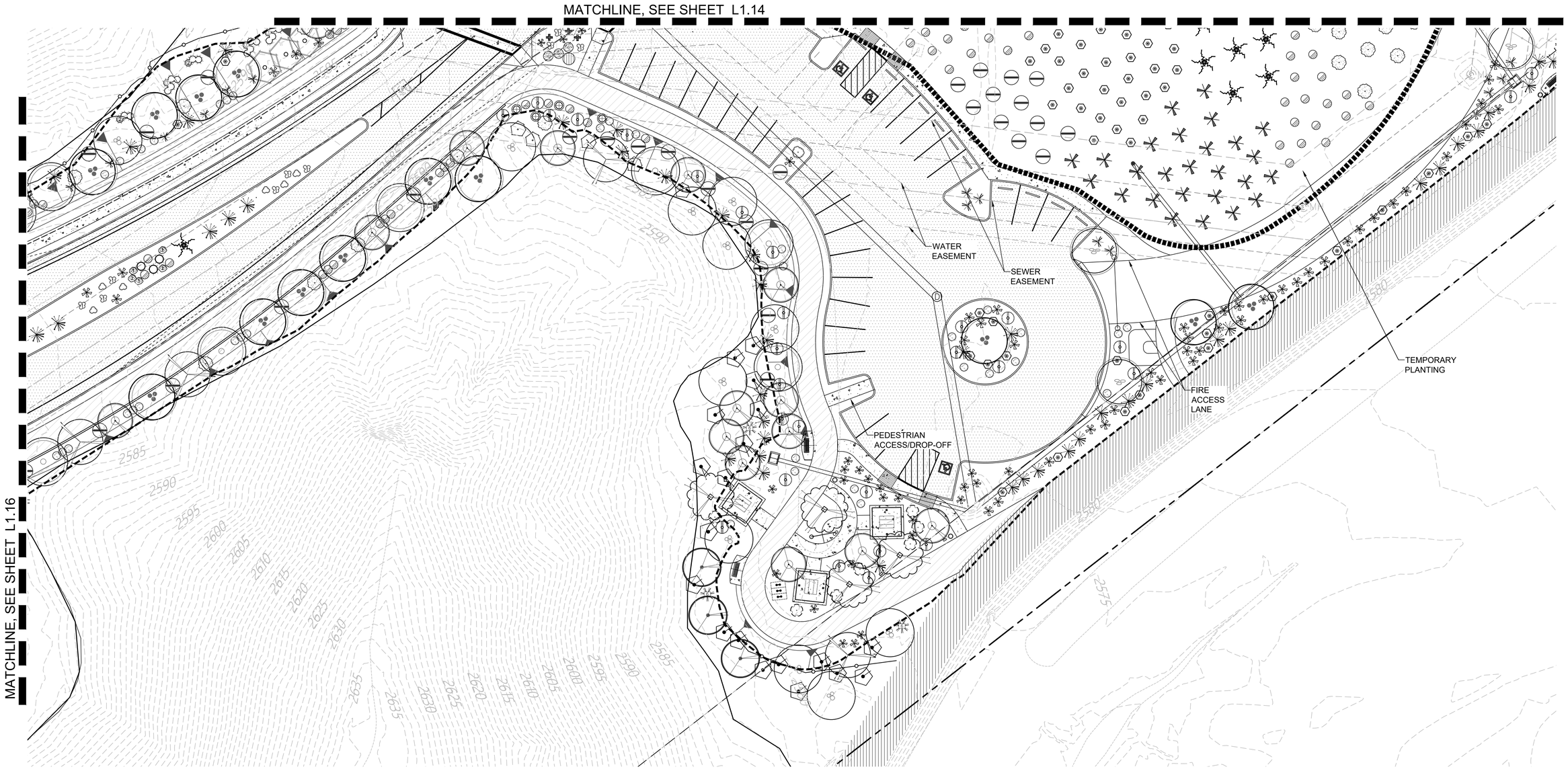

The WLB Group INC.

WLB

Engineering Planning Surveying
Landscape Architecture Urban Design
Offices located in Tucson, Phoenix, Flagstaff, Arizona, and Las Vegas, Nevada
4444 East Broadway
Tucson, Arizona (520) 881-7480

0' 20' 40' 60'

Q:\181057\GE-01\02 Landscape\08 FLP\181057 la posada flp 20-L1.15 plant 20 scale.dwg

THIS SHEET FOR CONTRACTOR INFORMATION PURPOSES

PLANTING PLAN

Call at least two full working days before you begin excavation.
ARIZONA 811
Arizona Blue Stake, Inc.
Dial 8-1-1 or 1-800-STAKE-IT (782-5348)
In Maricopa County: (602) 263-1100

REGISTERED LANDSCAPE ARCHITECT
CERTIFICATE NO. 25621
GARY L. GRIZZLE
Date Signed 3/30/22
ARIZONA, U.S.A.

FINAL LANDSCAPE PLAN
LA POSADA AT PUSCH RIDGE
PHASE 1
(REVISION TO FINAL LANDSCAPE PLAN FOR NAKOMA SKY)
PHASES 1, 2, 3 AND FUTURE PHASES

ROONEY RANCH AREA Z RECORDED IN BOOK 62 M&P, PAGE 4, LOTS 1–68 AND COMMON AREAS "A", "B", AND "C" BEING A PORTION OF SECTION 7, TOWNSHIP 12 SOUTH, RANGE 14 EAST, G & S.R.M. TOWN OF ORO VALLEY, PIMA COUNTY, ARIZONA

MARCH 2022
WLB NO. 181057–G–E02
CONTOUR INTERVAL: 1' SCALE: 1"=20'

L1.15

REFERENCE CASE #'S:
OV1601351
OV115–027
OV914–008
OV914–007A
OV903–03A
(O)15–14

L1.16

FINAL LANDSCAPE PLAN
LA POSADA AT PUSCH RIDGE
PHASE 1
(REVISION TO FINAL LANDSCAPE PLAN FOR NAKOMA SKY)
PHASES 1, 2, 3 AND FUTURE PHASES

ROONEY RANCH AREA Z RECORDED IN BOOK 62 M&P, PAGE 4, LOTS 1–68 AND COMMON AREAS "A", "B", AND "C" BEING A PORTION OF SECTION 7, TOWNSHIP 12 SOUTH, RANGE 14 EAST, G & S.R.M. TOWN OF ORO VALLEY, PIMA COUNTY, ARIZONA

MARCH 2022
WLB NO. 181057–G–E02
CONTOUR INTERVAL: 1' SCALE: 1"=20'

REFERENCE CASE #'S:
OV1601351
OV115–027
OV914–008
OV914–007A
OV903–03A
(O)15–14

REGISTERED LANDSCAPE ARCHITECT
CERTIFICATE NO. 25621
GARY L. GRIZZLE
Date Signed 3/30/22
ARIZONA, U.S.A.

Call at least two full working days before you begin excavation.
ARIZONA 811
Arizona Blue Stake, Inc.
Dial 8-1-1 or 1-800-STAKE-IT (782-5348)
In Maricopa County: (602) 263-1100

The WLB Group INC.
WLB
Engineering Planning Surveying
Landscape Architecture Urban Design
Offices located in Tucson, Phoenix, Flagstaff, Arizona, and Las Vegas, Nevada
4444 East Broadway
Tucson, Arizona (520) 881-7480

0' 20' 40' 60'

Q:\181057\GE-01\02 Landscape\08 FLP\181057 la posada flp 21-L1.16 plant 20 scale.dwg

THIS SHEET FOR CONTRACTOR INFORMATION PURPOSES

PLANTING PLAN

MATCHLINE, SEE SHEET L1.18

MATCHLINE, SEE SHEET L1.14

MAINTENANCE ACCESS ROAD

N56°30'00"E 887.96'

SHRUBS AND GROUNDCOVER TO BE ADJUSTED IN FIELD BASED ON LOCATIONS OF EXISTING TREES, TYPICAL

EXISTING MULTI-USE TRAIL

PROJECT BOUNDARY

BANK PROTECTION

CANADA DEL ORO WASH

2585

2580

0' 20' 40' 60'

THIS SHEET FOR CONTRACTOR INFORMATION PURPOSES

PLANTING PLAN

The WLB Group INC.

WLB

Engineering Planning Surveying
Landscape Architecture Urban Design
Offices located in Tucson, Phoenix, Flagstaff, Arizona, and Las Vegas, Nevada
4444 East Broadway
Tucson, Arizona (520) 881-7480

Q:\181057\GE-01\02 Landscape\08 FLP\181057 la posada flp 22-L1.17 plant 20 scale.dwg

Call at least two full working days before you begin excavation.
ARIZONA 811
Arizona Blue Stake, Inc.
Dial 8-1-1 or 1-800-STAKE-IT (782-5348)
In Maricopa County: (602) 263-1100

REGISTERED LANDSCAPE ARCHITECT
CERTIFICATE NO. 25621
GARY L. GRIZZLE
Date Signed 3/30/22
ARIZONA, U.S.A.

FINAL LANDSCAPE PLAN
LA POSADA AT PUSCH RIDGE
PHASE 1
(REVISION TO FINAL LANDSCAPE PLAN FOR NAKOMA SKY)
PHASES 1, 2, 3 AND FUTURE PHASES

ROONEY RANCH AREA Z RECORDED IN BOOK 62 M&P, PAGE 4, LOTS 1–68 AND COMMON AREAS "A", "B", AND "C" BEING A PORTION OF SECTION 7, TOWNSHIP 12 SOUTH, RANGE 14 EAST, G & S.R.M. TOWN OF ORO VALLEY, PIMA COUNTY, ARIZONA

MARCH 2022
WLB NO. 181057–G–E02
CONTOUR INTERVAL: 1' SCALE: 1"=20'

L1.17

REFERENCE CASE #'S:
OV1601351
OV115–027
OV914–008
OV914–007A
OV903–03A
(O)15–14

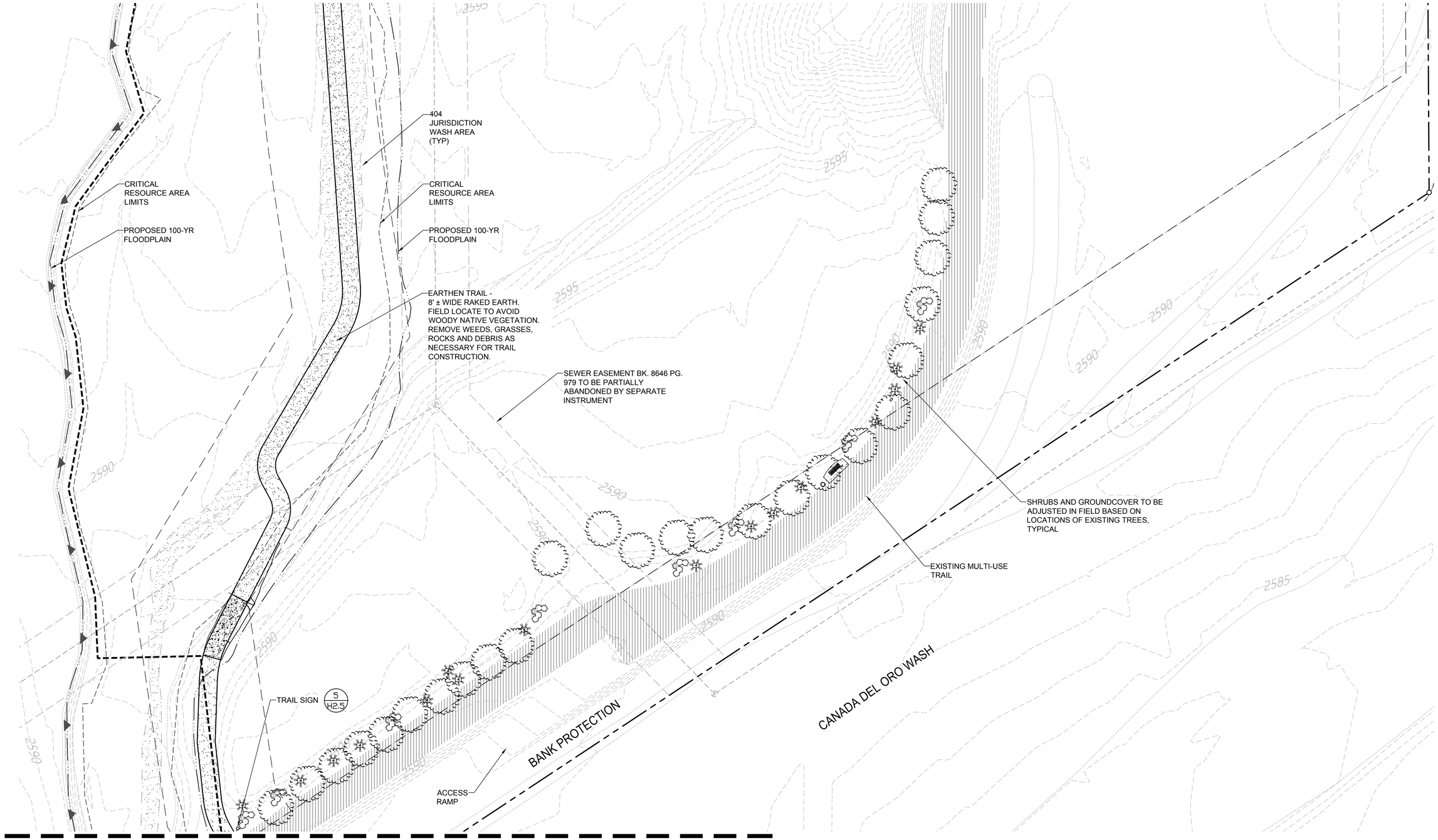

FINAL LANDSCAPE PLAN

LA POSADA AT PUSCH RIDGE

PHASE 1

(REVISION TO FINAL LANDSCAPE PLAN FOR NAKOMA SKY)

PHASES 1, 2, 3 AND FUTURE PHASES

ROONEY RANCH AREA Z RECORDED IN BOOK 62 M&P, PAGE 4, LOTS 1–68 AND COMMON AREAS "A", "B", AND "C" BEING A PORTION OF SECTION 7, TOWNSHIP 12 SOUTH, RANGE 14 EAST, G & S.R.M. TOWN OF ORO VALLEY, PIMA COUNTY, ARIZONA

MARCH 2022

WLB NO. 181057–G–E02

CONTOUR INTERVAL: 1' SCALE: 1"=20'

L1.18

REFERENCE CASE #'S:
OV1601351
OV115–027
OV914–008
OV914–007A
OV903–03A
(O)15–14

REGISTERED LANDSCAPE ARCHITECT CERTIFICATE NO. 25621 GARY L. GRIZZLE Date of Signature 3/30/22 ARIZONA U.S.A.

Call at least two full working days before you begin excavation. ARIZONA 811 Arizona Blue Stake, Inc. Dial 8-1-1 or 1-800-STAKE-IT (782-5348) In Maricopa County: (602) 263-1100

The WLB Group INC. **WLB**
Engineering Planning Surveying
Landscape Architecture Urban Design
Offices located in Tucson, Phoenix, Flagstaff, Arizona, and Las Vegas, Nevada
4444 East Broadway
Tucson, Arizona (520) 881-7480

0' 20' 40' 60'

Q:\181057\GE-01\02 Landscape\08 FLP\181057 la posada flp 23-L1.18 plant 20 scale.dwg

THIS SHEET FOR CONTRACTOR INFORMATION PURPOSES

PLANTING PLAN

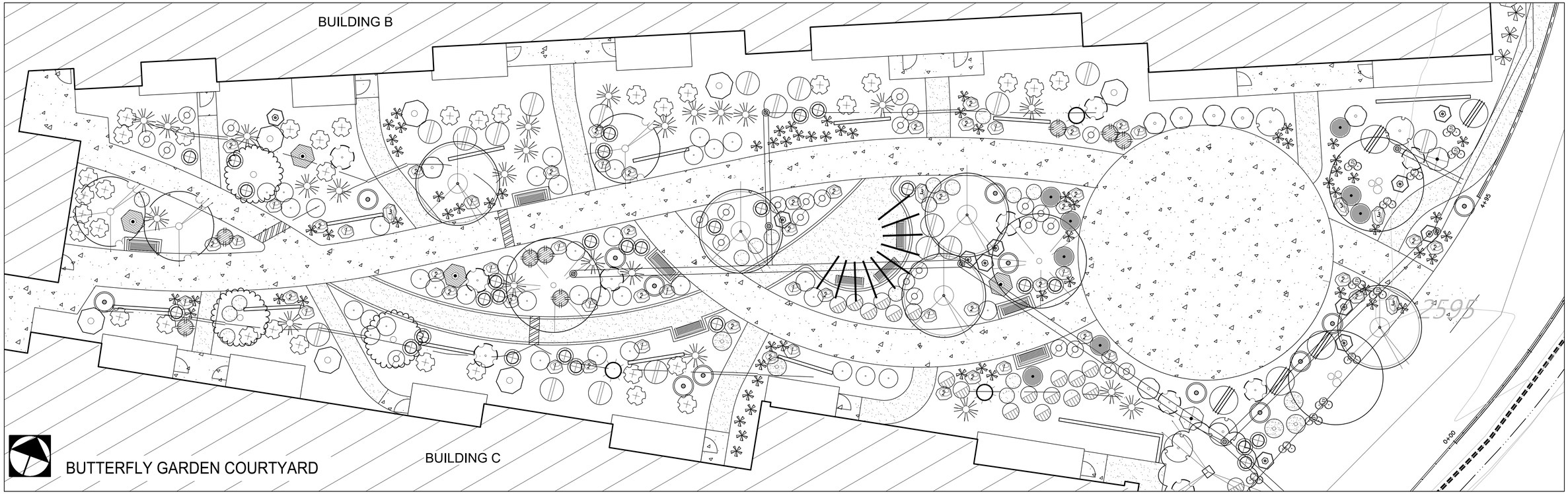

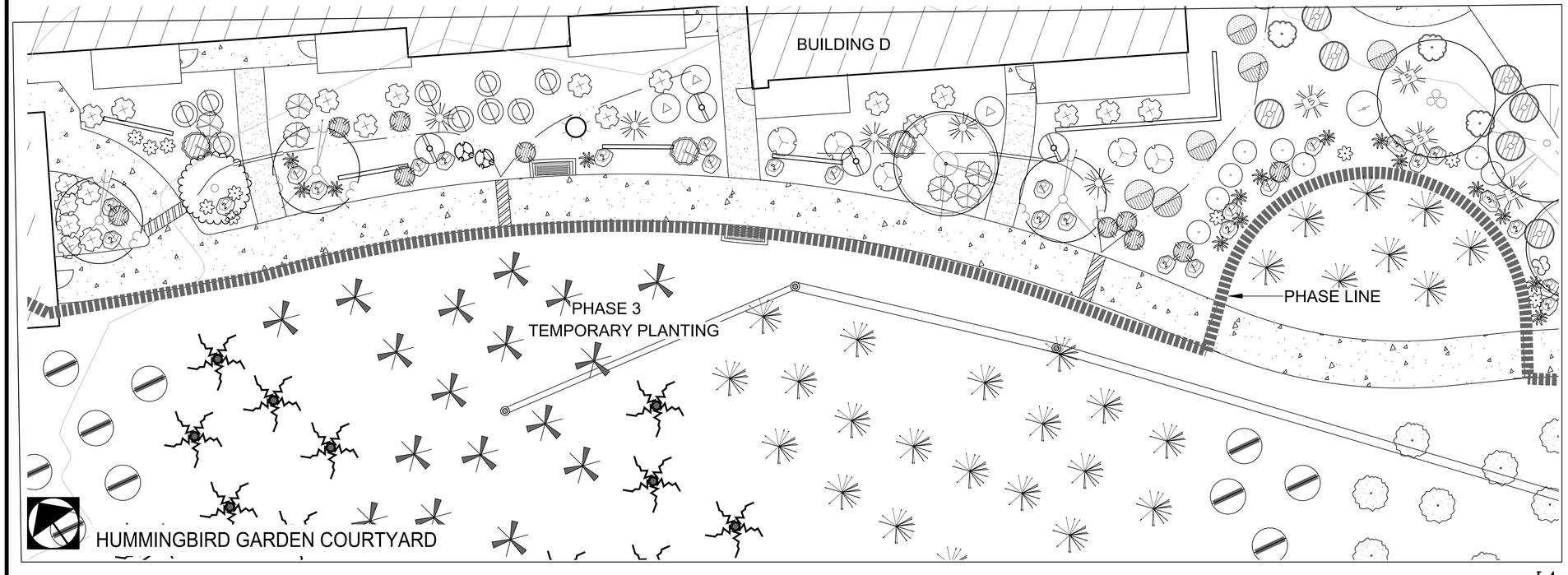

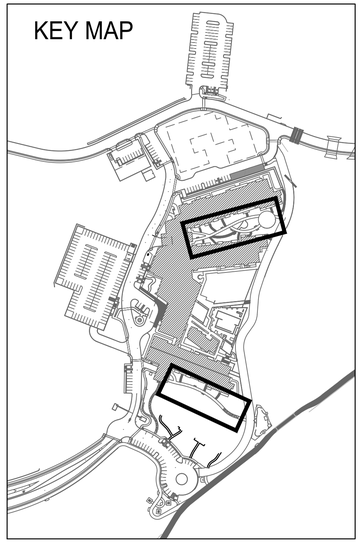

FINAL LANDSCAPE PLAN

LA POSADA AT PUSCH RIDGE

PHASE 1

(REVISION TO FINAL LANDSCAPE PLAN FOR NAKOMA SKY)

PHASES 1, 2, 3 AND FUTURE PHASES

ROONEY RANCH AREA Z RECORDED IN BOOK 62 M&P, PAGE 4, LOTS 1–68 AND COMMON AREAS "A", "B", AND "C" BEING A PORTION OF SECTION 7, TOWNSHIP 12 SOUTH, RANGE 14 EAST, G & S.R.M. TOWN OF ORO VALLEY, PIMA COUNTY, ARIZONA

MARCH 2022

WLB NO. 181057–G–E02

CONTOUR INTERVAL: 1' SCALE: 1"=10'

L1.19

REFERENCE CASE #'S:
OV1601351
OV115–027
OV914–008
OV914–007A
OV903–03A
(O)15–14

The WLB Group INC.

WLB

Engineering Planning Surveying
Landscape Architecture Urban Design
Offices located in Tucson, Phoenix, Flagstaff, Arizona, and Las Vegas, Nevada
4444 East Broadway
Tucson, Arizona (520) 881-7480

0' 10' 20' 30'

Q:\181057\GE-01\02 Landscape\08 FLP\181057 la posada flp 24-L1.19 plant 10 scale.dwg

10 SCALE–PLANTING PLAN

Call at least two full working days before you begin excavation.
ARIZONA 811
Arizona Blue Stake, Inc.
Dial 8-1-1 or 1-800-STAKE-IT (782-5348)
In Maricopa County: (602) 263-1100

REGISTERED LANDSCAPE ARCHITECT
CERTIFICATE NO. 25621
GARY L. GRIZZLE
Date Signed 3/30/22
ARIZONA, U.S.A.

CONTRACTOR TO INSTALL A SMALL PORTION OF THE DRY SWALE BED FOR REVIEW AND APPROVAL BY LANDSCAPE ARCHITECT

NOTE: CONTRACTOR SHALL SURVEY GRADES IN PROPOSED SWALES TO ENSURE POSITIVE DRAINAGE.

ROCK TO BE RANDOMLY DISTRIBUTED IN SWALE

SIDES OF SWALE TO BE APACHE BROWN ROCK MIX:

30% 1" - 3"
50% 3" - 6"
20% 6"+

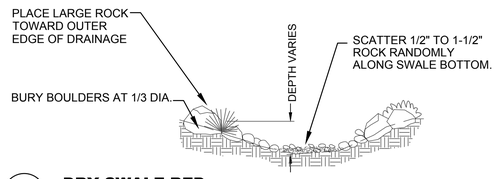

8 DRY SWALE BED

SCALE: NTS

NOTES:
1. FINISHED DEPTH: 2" MIN.
2. BEFORE SPREADING ROCK, REMOVE ROCK & DEBRIS.
3. DURING INSTALLATION RAKE D.G. TO SETTLE FINES.
4. LIGHTLY BROOM SURFACE OF D.G. AFTER INSTALLATION.
5. APPLY PRE-EMERGENT TO ALL D.G. AREAS.
6. APPLY A LIGHT MIST OF WATER OVER THE ENTIRE D.G. SURFACE.

9 INERT GROUNDCOVER

SCALE: NTS

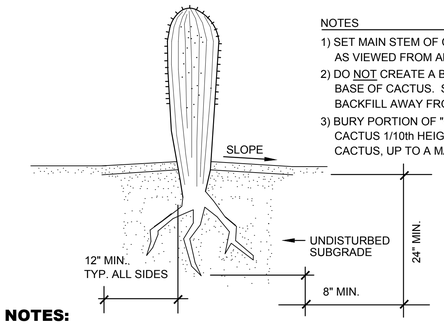

NOTES
1) SET MAIN STEM OF CACTUS PLUMB AS VIEWED FROM ALL SIDES.
2) DO NOT CREATE A BASIN AT BASE OF CACTUS. SLOPE BACKFILL AWAY FROM STEM.
3) BURY PORTION OF "GREEN" CACTUS 1/10th HEIGHT OF CACTUS, UP TO A MAXIMUM OF 24"

NOTES:

1. CLEAN SAND, NO STONES, MORTAR SAND IS RECOMMENDED
2. ROOT PRUNE ALL SHRDDED OR DAMAGED ROOTS. ENSURE ALL WOUNDS TO THE ROOT SYSTEM ARE CLEAN CUT PRIOR TO PLANTING. DUST ALL ROOTS WITH SULFUR.
3. PLANT SAGUARO AT LEAST 4' FROM SHRUBS OR TREES.
4. PLANTING WELL SHALL BE 6" MIN. WIDER THAN THE EXTENT OF THE SEVERED LATERAL ROOTS. CUT THROUGH TAPROOT TO PROVIDE A FLAT BASE WITH A DIAMETER SUFFICIENT TO SUPPORT THE WEIGHT OF THE UNSUPPORTED SAGUARO.
5. PLANTING DEPTH SHALL BE MAXIMUM OF 6" DEEPER THAN THE DEPTH AT WHICH THE PLANT WAS GROWN. THE TAPERING OF ROOT COLLAR MUST BE VISIBLE ABOVE THE FINISHED GRADE.
6. BACKFILL PLANTING WELL WITH DRY NATIVE SOIL TREATED WITH SOIL SULFUR COMPACT SOIL IN 6" LIFTS TO ENSURE THE STABILITY OF THE SAGUARO.
7. ALL SAGUARO PLACEMENTS SHALL MATCH ORIGINAL NORTH SIDE FACING NORTH. ANY SUNBURNED SAGUAROS SHALL BE REPLACED BY THE LANDSCAPE CONTRACTOR.
8. SAGUAROS ARE SPECIFIED BY HEIGHT. A VARIETY OF HEIGHTS MAY BE ACCEPTABLE PROVIDED THE AVERAGE IS NOT LESS THAN SPECIFIED. OWNER MUST APPROVE SAGUAROS PRIOR TO PLANTING.
9. MIST WITH WATER FROM TOP DOWN ONCE A MONTH IF PLANTED DURING HOT SEASON
10. AFTER TRANSPLANTING, ALLOW 2-3 WEEKS BEFORE FIRST WATERING.

5 COLUMNAR CACTUS PLANTING DETAIL

SCALE: NTS

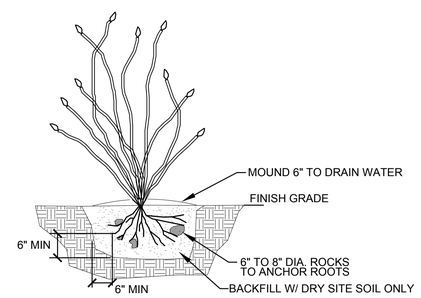

NOTES:
1. ROOT PRUNE ALL SHREDDED OR DAMAGED ROOTS.
2. ENSURE ALL WOUNDS TO THE ROOT SYSTEM ARE CLEAN CUT BEFORE PLANTING.
3. APPLY DUSTING SULFUR TO ALL AREAS BELOW GRADE.
4. BARE ROOTS SHALL NOT BE OUT OF THE GROUND FOR MORE THAN FIVE DAYS.
5. MIST WITH WATER FROM TOP DOWN EVERY OTHER WEEK IF PLANTED DURING HOT SEASON.

6 OCOTILLO PLANTING DETAIL

SCALE: NTS

BURY APPROX. 1/3 OF BOULDER

NOTE: BOULDERS ARE DIMENSIONED ON PLAN. SIZE CALLED OUT IS LARGEST DIMENSION.

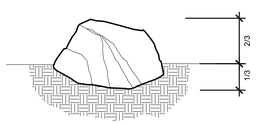

7 BOULDER PLACEMENT

SCALE: NTS

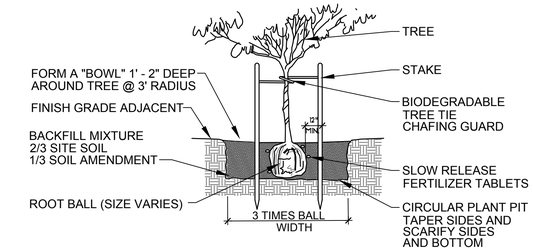

NOTE: 1. REMOVE ALL NURSERY STAKES AND CONTAINERS
2. WATER SETTLE BACKFILL IN 6" LIFTS

1 TREE PLANTING

NTS

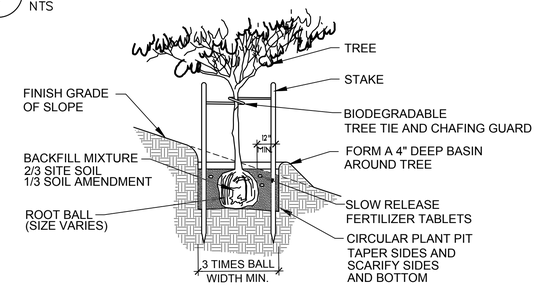

NOTE: 1. REMOVE ALL NURSERY STAKES AND CONTAINERS
2. WATER SETTLE BACKFILL 6" LIFTS

2 TREE PLANTING ON SLOPE

SCALE: NTS

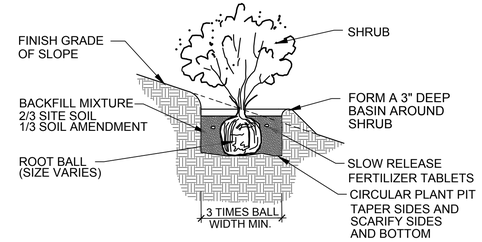

NOTE: 1. WATER SETTLE BACKFILL IN 6" LIFTS

3 SHRUB PLANTING ON SLOPE

NTS

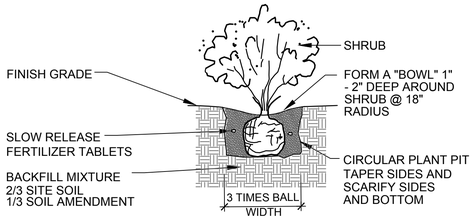

NOTE: 1. WATER SETTLE BACKFILL 6" LIFTS

4 SHRUB PLANTING

SCALE: NTS

The WLB Group INC.
WLB
Engineering Planning Surveying
Landscape Architecture Urban Design
Offices located in Tucson, Phoenix, Flagstaff, Arizona, and Las Vegas, Nevada
4444 East Broadway
Tucson, Arizona (520) 881-7480

Q:\181057\GE-01\02 Landscape\08 FLP\181057 la posada flp 25-L2.0 plant details.dwg

Call at least two full working days before you begin excavation.
ARIZONA 811
Arizona Blue Stake, Inc.
Dial 8-1-1 or 1-800-STAKE-IT (782-5348)
In Maricopa County: (602) 263-1100

REGISTERED LANDSCAPE ARCHITECT
CERTIFICATE NO. 25621
GARY L. GRIZZLE
Date Signed 3/30/22
ARIZONA U.S.A.

PLANTING DETAILS

FINAL LANDSCAPE PLAN
LA POSADA AT PUSCH RIDGE
PHASE 1
(REVISION TO FINAL LANDSCAPE PLAN FOR NAKOMA SKY)
PHASES 1, 2, 3 AND FUTURE PHASES

ROONEY RANCH AREA Z RECORDED IN BOOK 62 M&P, PAGE 4, LOTS 1–68 AND COMMON AREAS "A", "B", AND "C" BEING A PORTION OF SECTION 7, TOWNSHIP 12 SOUTH, RANGE 14 EAST, G & S.R.M. TOWN OF ORO VALLEY, PIMA COUNTY, ARIZONA

MARCH 2022
WLB NO. 181057–G–E02
CONTOUR INTERVAL: 1' SCALE: 1"=40'

AS NOTED

L2.0

REFERENCE CASE #'S:
OV1601351
OV115–027
OV914–008
OV914–007A
OV903–03A
(O)15–14

MATERIALS AND FINISHES:

PAVING: CONCRETE (PEDESTRIAN) COLOR "A" AND "B" - NATURAL GRAY CONCRETE
FINISH: SALT FINISH

PAVING: ARTISTIC PAVERS (PEDESTRIAN)

DOG PARK FENCE: OMEGA ARCHITECTURAL 4' HIGH PANEL. PANEL WIDTH: 4FT. COLOR: "TAUPE BROWN" POWDER COAT. INSTALL PER MANUFACTURER'S RECOMMENDATIONS.

DOG PARK GATE: OMEGA ARCHITECTURAL STANDARD GATE WITH "LOCKINOX" LOCKING LATCH COLOR: "TAUPE BROWN" POWDER COAT. INSTALL PER MANUFACTURER'S RECOMMENDATIONS.

BACKFLOW PREVENTER ASSEMBLY:
FEBCO 825Y. ISOLATION VALVE: NIBCO T113-K.
ENCLOSURE: GUARDSHACK GS-1N (WOODLAND TAN COLOR) PROVIDE R30 "FROSTGUARD" BLANKET.

DRINKING FOUNTAIN WITH DRY WELL: MOST DEPENDABLE FOUNTAINS MODEL 400 SM SHOWN W/ OPTIONAL PF AND 1010 SS SURFACE CARRIER 646-022b. INSTALL PER MANUFACTURER'S RECOMMENDATIONS. COLOR TO BE "TEXTURED PYRITE". SEPARATE BUILDING SERVICES DEPARTMENT PERMIT REQUIRED.

SHELTER: AMERICANA "CHEROKEE" 12'x12'. IN-GROUND MOUNT PER MANUFACTURER'S RECOMMENDATIONS. POST COLOR: "TAN", ROOF COLOR: "PATINA GREEN". CONTRACTOR SHALL PROVIDE STRUCTURAL DRAWINGS & CALCULATIONS SEALED BY A STRUCTURAL ENGINEER LICENSED IN THE STATE OF ARIZONA.

PICNIC TABLE: WABASH SIGNATURE SERIES SG210P. 6 FT. LONG PERFORATED. IN-GROUND-MOUNT PER MANUFACTURER RECOMMENDATIONS. COLOR: TEXTURED BRONZE POWDER COAT.

PET STATION: "DOGIPOT" #1003-L. METAL RECEPTACLE & DISPENSER, ALUMINUM "ON-LEASH" SIGN, GALVANIZED POST. COLOR: "FOREST GREEN". AVAILABLE FROM: PRO-PET DISTRIBUTORS, WWW.PROPETDISTRIBUTORS.COM (866) 364-4768. LOCATE POST NO CLOSER THAN 5 (FIVE) FEET FROM EDGE OF ASPHALT TRAIL OR AS SHOWN ON PLAN. FACE OF SIGN TO BE PARALLEL TO TRAIL.

BENCH: WABASH DEWART COLLECTION #DE1113C. 6FT. LONG HORIZONTAL SLAT. SURFACE-MOUNT PER MANUFACTURER RECOMMENDATIONS. COLOR: TEXTURED BRONZE POWDER COAT.

BICYCLE PARKING BIKE LOOPS (2): PW ATHLETIC 1700-00P. COLOR: "CAST BRONZE" POWDER COAT. SURFACE MOUNT PER MANUFACTURER'S RECOMMENDATIONS.

GLASS FENCE: CUSTOM AQUAVIEW FENCING OR APPROVED EQUAL

STONE VENEER: "MESQUITE CLIFFSTONE" BY ELDORADO STONE (800) 925 1491

REFUSE RECEPTACLE: "LAKESIDE GRASS" TOP-OPEN 35-GALLON RECEPTACLE. COLOR: "BRONZE". AVAILABLE FROM LANDSCAPE FORMS (800) 430-6206 XT 1324.

The WLB Group INC.
WLB
Engineering Planning Surveying
Landscape Architecture Urban Design
Offices located in Tucson, Phoenix, Flagstaff, Arizona, and Las Vegas, Nevada
4444 East Broadway
Tucson, Arizona (520) 881-7480

Q:\181057\GE-01\02 Landscape\08 FLP\181057 la posada flp 26-H1.0 materials.dwg

HARDSCAPE PLAN

Call at least two full working days before you begin excavation.
ARIZONA 811
Arizona Blue Stake, Inc.
Dial 8-1-1 or 1-800-STAKE-IT (782-5348)
In Maricopa County: (602) 263-1100

REGISTERED LANDSCAPE ARCHITECT
CERTIFICATE NO. 25621
GARY L. GRIZZLE
Date Signed 3/30/22
ARIZONA U.S.A.

FINAL LANDSCAPE PLAN
LA POSADA AT PUSCH RIDGE
PHASE 1
(REVISION TO FINAL LANDSCAPE PLAN FOR NAKOMA SKY)
PHASES 1, 2, 3 AND FUTURE PHASES

ROONEY RANCH AREA Z RECORDED IN BOOK 62 M&P, PAGE 4, LOTS 1–68 AND COMMON AREAS "A", "B", AND "C" BEING A PORTION OF SECTION 7, TOWNSHIP 12 SOUTH, RANGE 14 EAST, G & S.R.M. TOWN OF ORO VALLEY, PIMA COUNTY, ARIZONA

MARCH 2022
WLB NO. 181057–G–E02
CONTOUR INTERVAL: 1' SCALE: 1"=N/A

H1.0

REFERENCE CASE #'S:
OV1601351
OV115–027
OV914–008
OV914–007A
OV903–03A
(O)15–14

LAYOUT KEYNOTES

KEYNOTE NUMBERS NOT CONSECUTIVE

- 1 "BEACON" SCULPTURE PROVIDED BY ARTIST
- 2 "DESERT PASSAGE" SCULPTURE PROVIDED BY ARTIST
- 3 PAVING: ARTISTIC PAVERS (PEDESTRIAN) (5/H2.3)
- 4 ENTRY MONUMENT AND SIGNAGE PER SEPARATE PERMIT. SEE ARCHITECTURE PLANS (1/H2.6)
- 5 PAVING: CONCRETE (PEDESTRIAN) COLOR: NATURAL GRAY CONCRETE FINISH: SALT FINISH (2/H2.1)
- 6 PAVING: CONCRETE (PEDESTRIAN) COLOR: NATURAL GRAY CONCRETE FINISH: SALT FINISH (2/H2.1)
- 7 FIRE LANE - ASPHALT SEE IMPROVEMENT PLANS
- 8 PAVING: CONCRETE SIDEWALK BY CIVIL ENGINEERING PLANS
- 10 SITE WALL: STONE VENEER (1/H2.2)
- 11 SITE WALL: STUCCO (2/H2.2)
- 12 DECORATIVE WALL (8/H2.2)
- 13 SEAT WALL (6/H2.2)
- 14 LOW RETAINING WALL (3/H2.2)
- 15 PLANTER WALL (4/H2.2)
- 16 PLANTER WALL- STUCCO (5/H2.2)
- 17 POOL FENCE (1/H2.3)
- 18 POOL GATE (2/H2.3)
- 20 DOG PARK FENCE (3/H2.3) (4/H2.3)
- 25 ENTRY ACCESS COLUMN (1/H2.7) (2/H2.7)
- 26 DRINKING FOUNTAIN (3/H2.1)
- 28 SHELTER & PAD (4/H2.1)
- 29 PICNIC TABLE (4/H2.1)
- 30 ASPHALT MULTI-USE PATH
- 31 PET WASTE STATION
- 32 BENCH (1/H2.5)
- 34 ARTIFICIAL TURF (3/H2.5)
- 35 CONCRETE HEADER (4/H2.5)
- 36 BUTTERFLY GARDEN (–/H1.4)
- 37 HUMMINGBIRD GARDEN (–/H1.5)
- 44 DRY SWALE BED (8/L2.0)
- 45 STABILIZED DECOMPOSED GRANITE (2/H2.5)
- 48 BICYCLE PARKING (5/H2.1)
- 51 SECONDARY ENTRY GATE (2/H2.6)
- 52 GLASS POOL FENCE (2/H2.3)
- 57 POOL GATE (2/H2.3)
- 58 RETAINING WALL (10/H2.2)
- 59 BOULDERS (7/L2.0)
- 60 REFUSE RECEPTACLE

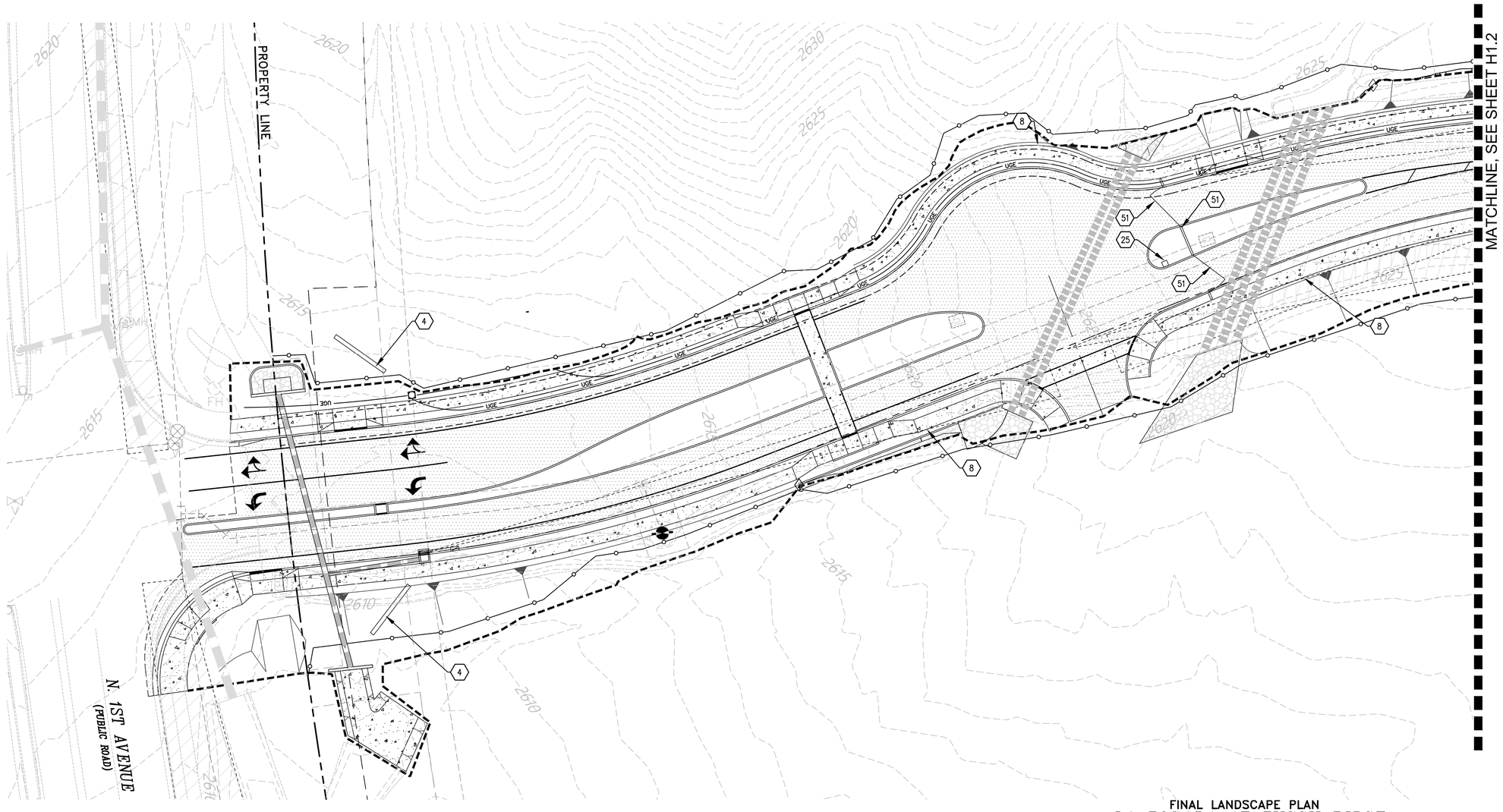

FINAL LANDSCAPE PLAN

LA POSADA AT PUSCH RIDGE

PHASE 1

(REVISION TO FINAL LANDSCAPE PLAN FOR NAKOMA SKY)

PHASES 1, 2, 3 AND FUTURE PHASES

ROONEY RANCH AREA Z RECORDED IN BOOK 62 M&P, PAGE 4, LOTS 1–68 AND COMMON AREAS "A", "B", AND "C" BEING A PORTION OF SECTION 7, TOWNSHIP 12 SOUTH, RANGE 14 EAST, G & S.R.M. TOWN OF ORO VALLEY, PIMA COUNTY, ARIZONA

MARCH 2022

WLB NO. 181057–G–E02

CONTOUR INTERVAL: 1' SCALE: 1"=20'

H1.1

REFERENCE CASE #'S:
OV1601351
OV115–027
OV914–008
OV914–007A
OV903–03A
(O)15–14

The WLB Group INC. **WLB**

Engineering Planning Surveying
Landscape Architecture Urban Design
Offices located in Tucson, Phoenix, Flagstaff, Arizona, and Las Vegas, Nevada
4444 East Broadway
Tucson, Arizona (520) 881-7480

0' 20' 40' 60'

Q:\181057\GE-01\02 Landscape\08 FLP\181057 la posada flp 27-H1.1 hardscape.dwg

HARDSCAPE PLAN

Call at least two full working days before you begin excavation.
ARIZONA 811
Arizona Blue Stake, Inc.
Dial 8-1-1 or 1-800-STAKE-IT (782-5348)
In Maricopa County: (602) 263-1100

REGISTERED LANDSCAPE ARCHITECT
CERTIFICATE NO. 25621
GARY L. GRIZZLE
Date Signed 3/30/22
ARIZONA U.S.A.

MATCHLINE, SEE SHEET H1.1

MATCHLINE, SEE SHEET H1.3

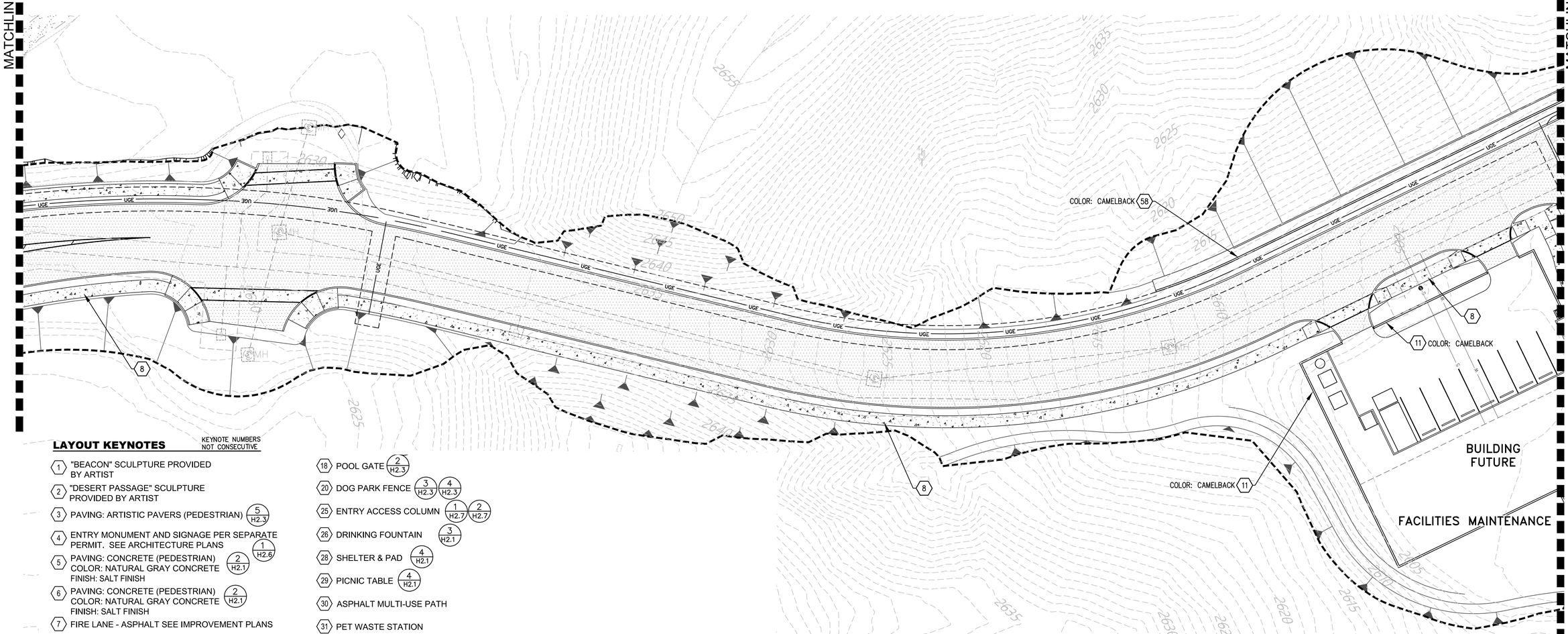

LAYOUT KEYNOTES

KEYNOTE NUMBERS NOT CONSECUTIVE

1. "BEACON" SCULPTURE PROVIDED BY ARTIST
2. "DESERT PASSAGE" SCULPTURE PROVIDED BY ARTIST
3. PAVING: ARTISTIC PAVERS (PEDESTRIAN) (5/H2.3)
4. ENTRY MONUMENT AND SIGNAGE PER SEPARATE PERMIT. SEE ARCHITECTURE PLANS (1/H2.6)
5. PAVING: CONCRETE (PEDESTRIAN) COLOR: NATURAL GRAY CONCRETE FINISH: SALT FINISH (2/H2.1)
6. PAVING: CONCRETE (PEDESTRIAN) COLOR: NATURAL GRAY CONCRETE FINISH: SALT FINISH (2/H2.1)
7. FIRE LANE - ASPHALT SEE IMPROVEMENT PLANS
8. PAVING: CONCRETE SIDEWALK BY CIVIL ENGINEERING PLANS
10. SITE WALL: STONE VENEER (1/H2.2)
11. SITE WALL: STUCCO (2/H2.2)
12. DECORATIVE WALL (8/H2.2)
13. SEAT WALL (6/H2.2)
14. LOW RETAINING WALL (3/H2.2)
15. PLANTER WALL (4/H2.2)
16. PLANTER WALL- STUCCO (5/H2.2)
17. POOL FENCE (1/H2.3)
18. POOL GATE (2/H2.3)
20. DOG PARK FENCE (3/H2.3) (4/H2.3)
25. ENTRY ACCESS COLUMN (1/H2.7) (2/H2.7)
26. DRINKING FOUNTAIN (3/H2.1)
28. SHELTER & PAD (4/H2.1)
29. PICNIC TABLE (4/H2.1)
30. ASPHALT MULTI-USE PATH
31. PET WASTE STATION
32. BENCH (1/H2.5)
34. ARTIFICIAL TURF (3/H2.5)
35. CONCRETE HEADER (4/H2.5)
36. BUTTERFLY GARDEN (–/H1.4)
37. HUMMINGBIRD GARDEN (–/H1.5)
44. DRY SWALE BED (8/L2.0)
45. STABILIZED DECOMPOSED GRANITE (2/H2.5)
48. BICYCLE PARKING (5/H2.1)
51. SECONDARY ENTRY GATE (2/H2.6)
52. GLASS POOL FENCE (2/H2.3)
57. POOL GATE (2/H2.3)
58. RETAINING WALL (10/H2.2)
59. BOULDERS (7/L2.0)
60. REFUSE RECEPTACLE

The WLB Group INC.

WLB

Engineering Planning Surveying
Landscape Architecture Urban Design
Offices located in Tucson, Phoenix, Flagstaff, Arizona, and Las Vegas, Nevada
4444 East Broadway
Tucson, Arizona (520) 881-7480

0' 20' 40' 60'

Q:\181057\GE-01\02 Landscape\08 FLP\181057 la posada flp 28-H1.2 hardscape.dwg

HARDSCAPE PLAN

Call at least two full working days before you begin excavation.
ARIZONA 811
Arizona Blue Stake, Inc.
Dial 8-1-1 or 1-800-STAKE-IT (782-5348)
In Maricopa County: (602) 263-1100

REGISTERED LANDSCAPE ARCHITECT
CERTIFICATE NO. 25621
GARY L. GRIZZLE
Date Signed 3/30/22
ARIZONA, U.S.A.

FINAL LANDSCAPE PLAN
LA POSADA AT PUSCH RIDGE
PHASE 1
(REVISION TO FINAL LANDSCAPE PLAN FOR NAKOMA SKY)
PHASES 1, 2, 3 AND FUTURE PHASES

ROONEY RANCH AREA Z RECORDED IN BOOK 62 M&P, PAGE 4, LOTS 1–68 AND COMMON AREAS "A", "B", AND "C" BEING A PORTION OF SECTION 7, TOWNSHIP 12 SOUTH, RANGE 14 EAST, G & S.R.M. TOWN OF ORO VALLEY, PIMA COUNTY, ARIZONA

MARCH 2022
WLB NO. 181057–G–E02
CONTOUR INTERVAL: 1' SCALE: 1"=20'

H1.2

REFERENCE CASE #'S:
OV1601351
OV115–027
OV914–008
OV914–007A
OV903–03A
(O)15–14

LAYOUT KEYNOTES

KEYNOTE NUMBERS NOT CONSECUTIVE

- 1 "BEACON" SCULPTURE PROVIDED BY ARTIST
- 2 "DESERT PASSAGE" SCULPTURE PROVIDED BY ARTIST
- 3 PAVING: ARTISTIC PAVERS (PEDESTRIAN) (5/H2.3)
- 4 ENTRY MONUMENT AND SIGNAGE PER SEPARATE PERMIT. SEE ARCHITECTURE PLANS (1/H2.6)
- 5 PAVING: CONCRETE (PEDESTRIAN) COLOR: NATURAL GRAY CONCRETE FINISH: SALT FINISH (2/H2.1)
- 6 PAVING: CONCRETE (PEDESTRIAN) COLOR: NATURAL GRAY CONCRETE FINISH: SALT FINISH (2/H2.1)
- 7 FIRE LANE - ASPHALT SEE IMPROVEMENT PLANS
- 8 PAVING: CONCRETE SIDEWALK BY CIVIL ENGINEERING PLANS
- 10 SITE WALL: STONE VENEER (1/H2.2)
- 11 SITE WALL: STUCCO (2/H2.2)
- 12 DECORATIVE WALL (8/H2.2)
- 13 SEAT WALL (6/H2.2)
- 14 LOW RETAINING WALL (3/H2.2)
- 15 PLANTER WALL (4/H2.2)
- 16 PLANTER WALL- STUCCO (5/H2.2)
- 17 POOL FENCE (1/H2.3)
- 18 POOL GATE (2/H2.3)
- 20 DOG PARK FENCE (3/H2.3) (4/H2.3)
- 25 ENTRY ACCESS COLUMN (1/H2.7) (2/H2.7)
- 26 DRINKING FOUNTAIN (3/H2.1)
- 28 SHELTER & PAD (4/H2.1)
- 29 PICNIC TABLE (4/H2.1)
- 30 ASPHALT MULTI-USE PATH
- 31 PET WASTE STATION
- 32 BENCH (1/H2.5)
- 34 ARTIFICIAL TURF (3/H2.5)
- 35 CONCRETE HEADER (4/H2.5)
- 36 BUTTERFLY GARDEN (—/H1.4)
- 37 HUMMINGBIRD GARDEN (—/H1.5)
- 44 DRY SWALE BED (8/L2.0)
- 45 STABILIZED DECOMPOSED GRANITE (2/H2.5)
- 48 BICYCLE PARKING (5/H2.1)
- 51 SECONDARY ENTRY GATE (2/H2.6)
- 52 GLASS POOL FENCE (2/H2.3)
- 57 POOL GATE (2/H2.3)
- 58 RETAINING WALL (10/H2.2)
- 59 BOULDERS (7/L2.0)
- 60 REFUSE RECEPTACLE

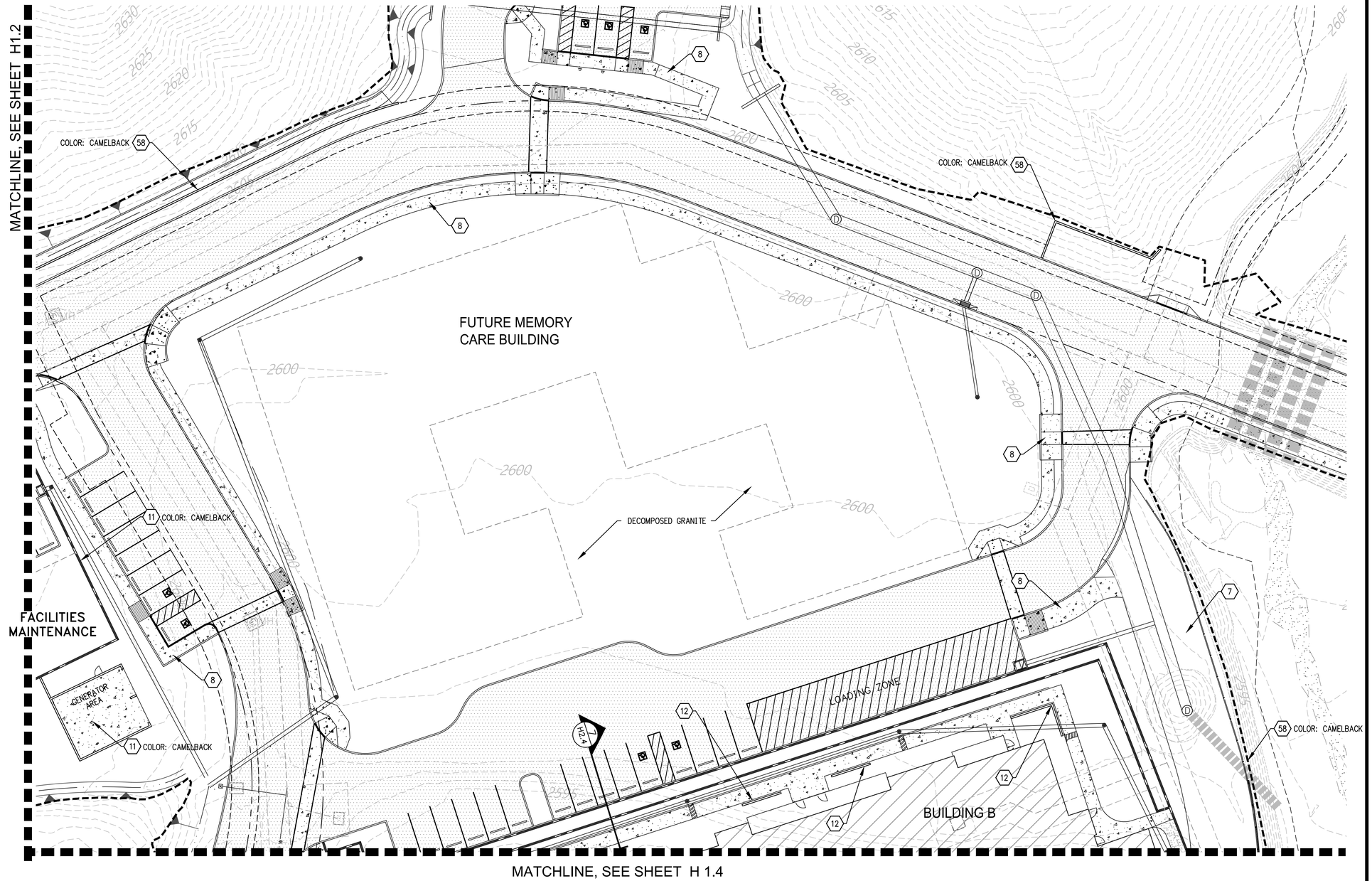

The WLB Group INC. **WLB**

Engineering Planning Surveying
Landscape Architecture Urban Design
Offices located in Tucson, Phoenix, Flagstaff, Arizona, and Las Vegas, Nevada
4444 East Broadway
Tucson, Arizona (520) 881-7480

0' 20' 40' 60'

Q:\181057\GE-01\02 Landscape\08 FLP\181057 la posada flp 29-H1.3 hardscape.dwg

HARDSCAPE PLAN

Call at least two full working days before you begin excavation. ARIZONA 811 Arizona Blue Stake, Inc. Dial 8-1-1 or 1-800-STAKE-IT (782-5348) In Maricopa County: (602) 263-1100

REGISTERED LANDSCAPE ARCHITECT CERTIFICATE NO. 25621 GARY L. GRIZZLE Date Signed 3/30/22 ARIZONA, U.S.A.

FINAL LANDSCAPE PLAN
LA POSADA AT PUSCH RIDGE
PHASE 1
(REVISION TO FINAL LANDSCAPE PLAN FOR NAKOMA SKY)
PHASES 1, 2, 3 AND FUTURE PHASES

ROONEY RANCH AREA Z RECORDED IN BOOK 62 M&P, PAGE 4, LOTS 1–68 AND COMMON AREAS "A", "B", AND "C" BEING A PORTION OF SECTION 7, TOWNSHIP 12 SOUTH, RANGE 14 EAST, G & S.R.M. TOWN OF ORO VALLEY, PIMA COUNTY, ARIZONA

MARCH 2022
WLB NO. 181057–G–E02
CONTOUR INTERVAL: 1' SCALE: 1"=20'

H1.3

REFERENCE CASE #'S:
0V1601351
0V115–027
0V914–008
0V914–007A
0V903–03A
(0)15–14

LAYOUT KEYNOTES

KEYNOTE NUMBERS NOT CONSECUTIVE

- (1) "BEACON" SCULPTURE PROVIDED BY ARTIST
- (2) "DESERT PASSAGE" SCULPTURE PROVIDED BY ARTIST
- (3) PAVING: ARTISTIC PAVERS (PEDESTRIAN) (5/H2.3)
- (4) ENTRY MONUMENT AND SIGNAGE PER SEPARATE PERMIT. SEE ARCHITECTURE PLANS (1/H2.6)
- (5) PAVING: CONCRETE (PEDESTRIAN) COLOR: NATURAL GRAY CONCRETE FINISH: SALT FINISH (2/H2.1)
- (6) PAVING: CONCRETE (PEDESTRIAN) COLOR: NATURAL GRAY CONCRETE FINISH: SALT FINISH (2/H2.1)
- (7) FIRE LANE - ASPHALT SEE IMPROVEMENT PLANS
- (8) PAVING: CONCRETE SIDEWALK BY CIVIL ENGINEERING PLANS
- (10) SITE WALL: STONE VENEER (1/H2.2)
- (11) SITE WALL: STUCCO (2/H2.2)
- (12) DECORATIVE WALL (8/H2.2)
- (13) SEAT WALL (6/H2.2)
- (14) LOW RETAINING WALL (3/H2.2)
- (15) PLANTER WALL (4/H2.2)
- (16) PLANTER WALL- STUCCO (5/H2.2)
- (17) POOL FENCE (1/H2.3)
- (18) POOL GATE (2/H2.3)
- (20) DOG PARK FENCE (3/H2.3) (4/H2.3)
- (25) ENTRY ACCESS COLUMN (1/H2.7) (2/H2.7)
- (26) DRINKING FOUNTAIN (3/H2.1)
- (28) SHELTER & PAD (4/H2.1)
- (29) PICNIC TABLE (4/H2.1)
- (30) ASPHALT MULTI-USE PATH
- (31) PET WASTE STATION
- (32) BENCH (1/H2.5)
- (34) ARTIFICIAL TURF (3/H2.5)
- (35) CONCRETE HEADER (4/H2.5)
- (36) BUTTERFLY GARDEN (–/H1.4)
- (37) HUMMINGBIRD GARDEN (–/H1.5)
- (44) DRY SWALE BED (8/L2.0)
- (45) STABILIZED DECOMPOSED GRANITE (2/H2.5)
- (48) BICYCLE PARKING (5/H2.1)
- (51) SECONDARY ENTRY GATE (2/H2.6)
- (52) GLASS POOL FENCE (2/H2.3)
- (57) POOL GATE (2/H2.3)
- (58) RETAINING WALL (10/H2.2)
- (59) BOULDERS (7/L2.0)
- (60) REFUSE RECEPTACLE

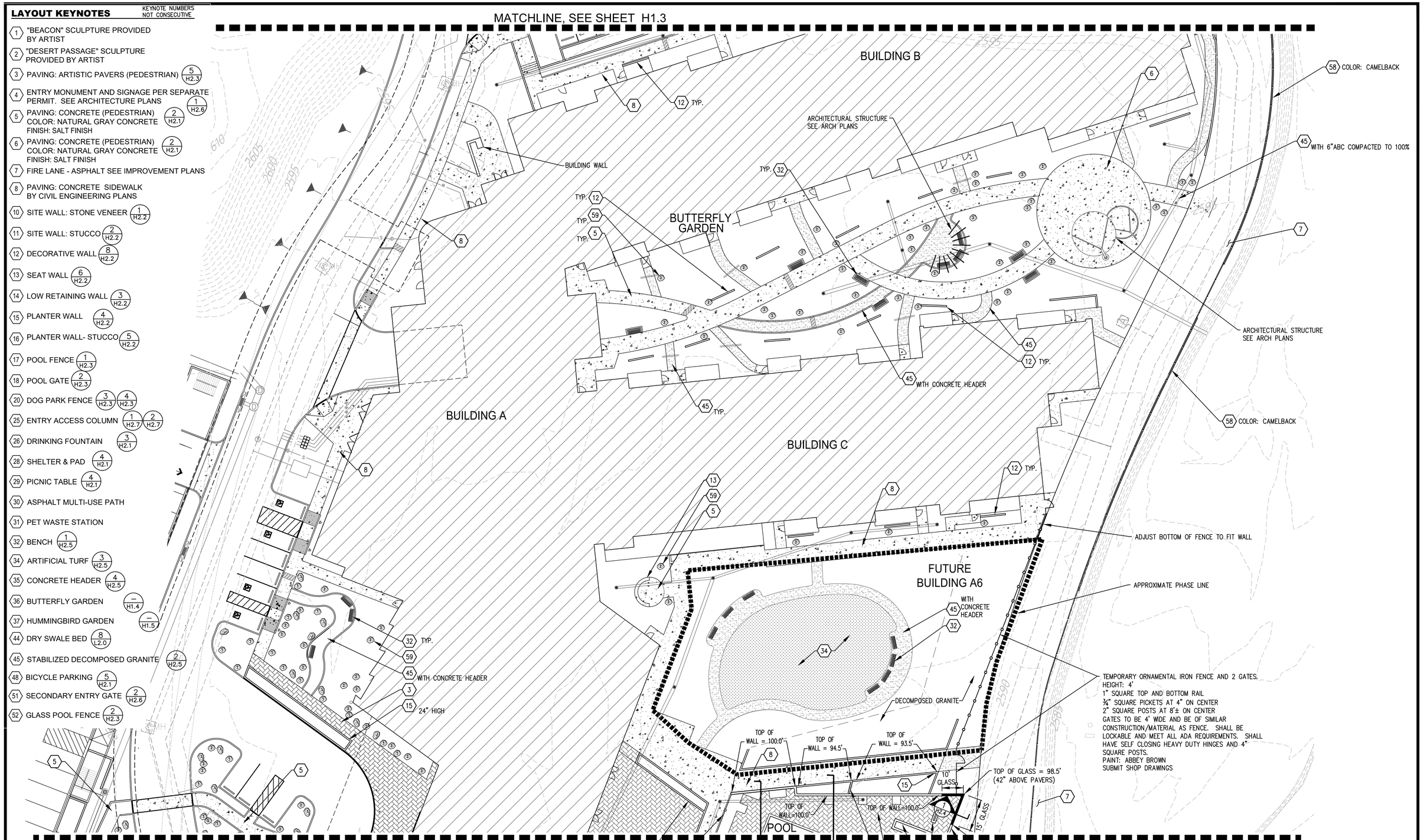

The WLB Group INC.

WLB

Engineering Planning Surveying
Landscape Architecture Urban Design
Offices located in Tucson, Phoenix, Flagstaff, Arizona, and Las Vegas, Nevada
4444 East Broadway
Tucson, Arizona (520) 881-7480

0' 20' 40' 60'

Q:\181057\GE-01\02 Landscape\08 FLP\181057 la posada flp 30-H1.4 hardscape.dwg

HARDSCAPE PLAN

Call at least two full working days before you begin excavation.
ARIZONA 811
Arizona Blue Stake, Inc.
Dial 8-1-1 or 1-800-STAKE-IT (782-5348)
In Maricopa County (602) 263-1100

REGISTERED LANDSCAPE ARCHITECT
CERTIFICATE NO. 25621
GARY L. GRIZZLE
3/30/22
Date Signed
ARIZONA, U.S.A.

FINAL LANDSCAPE PLAN
LA POSADA AT PUSCH RIDGE
PHASE 1
(REVISION TO FINAL LANDSCAPE PLAN FOR NAKOMA SKY)
PHASES 1, 2, 3 AND FUTURE PHASES

ROONEY RANCH AREA Z RECORDED IN BOOK 62 M&P, PAGE 4, LOTS 1–68 AND COMMON AREAS "A", "B", AND "C" BEING A PORTION OF SECTION 7, TOWNSHIP 12 SOUTH, RANGE 14 EAST, G & S.R.M. TOWN OF ORO VALLEY, PIMA COUNTY, ARIZONA

MARCH 2022
WLB NO. 181057–G–E02
CONTOUR INTERVAL: 1' SCALE: 1"=20'

H1.4

REFERENCE CASE #'S:
OV1601351
OV115–027
OV914–008
OV914–007A
OV903–03A
(O)15–14

MATCHLINE, SEE SHEET H 1.4

MATCHLINE, SEE SHEET H 1.6

FOR HARDSCAPE KEYNOTES SEE SHEET H1.1

FINAL LANDSCAPE PLAN

LA POSADA AT PUSCH RIDGE

PHASE 1

(REVISION TO FINAL LANDSCAPE PLAN FOR NAKOMA SKY)

PHASES 1, 2, 3 AND FUTURE PHASES

ROONEY RANCH AREA Z RECORDED IN BOOK 62 M&P, PAGE 4, LOTS 1-68 AND COMMON AREAS "A", "B", AND "C" BEING A PORTION OF SECTION 7, TOWNSHIP 12 SOUTH, RANGE 14 EAST, G & S.R.M. TOWN OF ORO VALLEY, PIMA COUNTY, ARIZONA

MARCH 2022

WLB NO. 181057-G-E02

CONTOUR INTERVAL: 1' SCALE: 1"=20'

REGISTERED LANDSCAPE ARCHITECT CERTIFICATE NO. 25621 GARY L. GRIZZLE Date Signed 3/30/23 ARIZONA U.S.A.

Call at least two full working days before you begin excavation. ARIZONA 811 Arizona Blue Stake, Inc. Dial 8-1-1 or 1-800-STAKE-IT (782-5348) In Maricopa County: (602) 263-1100

H1.5

REFERENCE CASE #'S:
OV1601351
OV115-027
OV914-008
OV914-007A
OV903-03A
(O)15-14

HARDSCAPE PLAN

The WLB Group INC.
WLB
Engineering Planning Surveying Landscape Architecture Urban Design
Offices located in Tucson, Phoenix, Flagstaff, Arizona, and Las Vegas, Nevada
4444 East Broadway
Tucson, Arizona (520) 881-7480

0' 20' 40' 60'

Q:\181057\GE-01\02 Landscape\08 FLP\181057 la posada flp 31-H1.5 hardscape.dwg

MATCHLINE, SEE SHEET H1.5

MATCHLINE, SEE SHEET H1.7

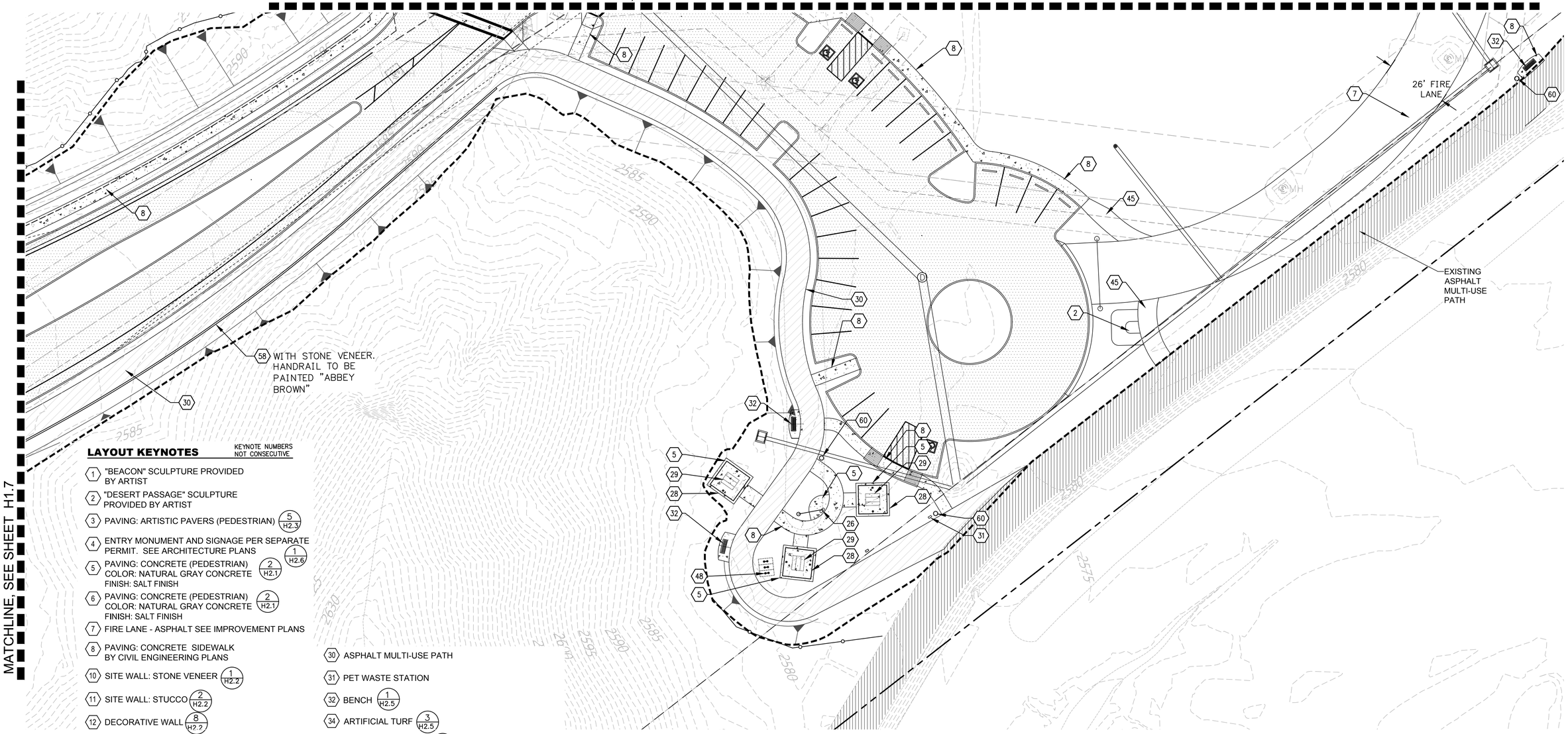

LAYOUT KEYNOTES

KEYNOTE NUMBERS NOT CONSECUTIVE

1. "BEACON" SCULPTURE PROVIDED BY ARTIST
2. "DESERT PASSAGE" SCULPTURE PROVIDED BY ARTIST
3. PAVING: ARTISTIC PAVERS (PEDESTRIAN) (5 / H2.3)
4. ENTRY MONUMENT AND SIGNAGE PER SEPARATE PERMIT. SEE ARCHITECTURE PLANS (1 / H2.6)
5. PAVING: CONCRETE (PEDESTRIAN) COLOR: NATURAL GRAY CONCRETE FINISH: SALT FINISH (2 / H2.1)
6. PAVING: CONCRETE (PEDESTRIAN) COLOR: NATURAL GRAY CONCRETE FINISH: SALT FINISH (2 / H2.1)
7. FIRE LANE - ASPHALT SEE IMPROVEMENT PLANS
8. PAVING: CONCRETE SIDEWALK BY CIVIL ENGINEERING PLANS

10. SITE WALL: STONE VENEER (1 / H2.2)
11. SITE WALL: STUCCO (2 / H2.2)
12. DECORATIVE WALL (8 / H2.2)
13. SEAT WALL (6 / H2.2)
14. LOW RETAINING WALL (3 / H2.2)
15. PLANTER WALL (4 / H2.2)
16. PLANTER WALL- STUCCO (5 / H2.2)
17. POOL FENCE (1 / H2.3)
18. POOL GATE (2 / H2.3)
20. DOG PARK FENCE (3 / H2.3) (4 / H2.3)
25. ENTRY ACCESS COLUMN (1 / H2.7) (2 / H2.7)
26. DRINKING FOUNTAIN (3 / H2.1)
28. SHELTER & PAD (4 / H2.1)
29. PICNIC TABLE (4 / H2.1)
30. ASPHALT MULTI-USE PATH
31. PET WASTE STATION
32. BENCH (1 / H2.5)
34. ARTIFICIAL TURF (3 / H2.5)
35. CONCRETE HEADER (4 / H2.5)
36. BUTTERFLY GARDEN (– / H1.4)
37. HUMMINGBIRD GARDEN (– / H1.5)
44. DRY SWALE BED (8 / L2.0)
45. STABILIZED DECOMPOSED GRANITE (2 / H2.5)
48. BICYCLE PARKING (5 / H2.1)
51. SECONDARY ENTRY GATE (2 / H2.6)
52. GLASS POOL FENCE (2 / H2.3)
57. POOL GATE (2 / H2.3)
58. RETAINING WALL (10 / H2.2)
59. BOULDERS (7 / L2.0)
60. REFUSE RECEPTACLE

The WLB Group INC.

WLB

Engineering Planning Surveying
Landscape Architecture Urban Design
Offices located in Tucson, Phoenix, Flagstaff, Arizona, and Las Vegas, Nevada
4444 East Broadway
Tucson, Arizona (520) 881-7480

0' 20' 40' 60'

Q:\181057\GE-01\02 Landscape\08 FLP\181057 la posada flp 32-H1.6 hardscape.dwg

HARDSCAPE PLAN

Call at least two full working days before you begin excavation.
ARIZONA 811
Arizona Blue Stake, Inc.
Dial 8-1-1 or 1-800-STAKE-IT (782-5348)
In Maricopa County: (602) 263-1100

REGISTERED LANDSCAPE ARCHITECT
CERTIFICATE NO. 25621
GARY L. GRIZZLE
Date Signed 3/30/22
ARIZONA U.S.A.

FINAL LANDSCAPE PLAN

LA POSADA AT PUSCH RIDGE

PHASE 1

(REVISION TO FINAL LANDSCAPE PLAN FOR NAKOMA SKY)
PHASES 1, 2, 3 AND FUTURE PHASES

ROONEY RANCH AREA Z RECORDED IN BOOK 62 M&P, PAGE 4, LOTS 1–68 AND COMMON AREAS "A", "B", AND "C" BEING A PORTION OF SECTION 7, TOWNSHIP 12 SOUTH, RANGE 14 EAST, G & S.R.M. TOWN OF ORO VALLEY, PIMA COUNTY, ARIZONA

MARCH 2022
WLB NO. 181057–G–E02
CONTOUR INTERVAL: 1' SCALE: 1"=20'

H1.6

REFERENCE CASE #'S:
0V1601351
0V115–027
0V914–008
0V914–007A
0V903–03A
(O)15–14

LAYOUT KEYNOTES

KEYNOTE NUMBERS NOT CONSECUTIVE

- 1 "BEACON" SCULPTURE PROVIDED BY ARTIST
- 2 "DESERT PASSAGE" SCULPTURE PROVIDED BY ARTIST
- 3 PAVING: ARTISTIC PAVERS (PEDESTRIAN) (5/H2.3)
- 4 ENTRY MONUMENT AND SIGNAGE PER SEPARATE PERMIT. SEE ARCHITECTURE PLANS (1/H2.6)
- 5 PAVING: CONCRETE (PEDESTRIAN) COLOR: NATURAL GRAY CONCRETE FINISH: SALT FINISH (2/H2.1)
- 6 PAVING: CONCRETE (PEDESTRIAN) COLOR: NATURAL GRAY CONCRETE FINISH: SALT FINISH (2/H2.1)
- 7 FIRE LANE - ASPHALT SEE IMPROVEMENT PLANS
- 8 PAVING: CONCRETE SIDEWALK BY CIVIL ENGINEERING PLANS
- 10 SITE WALL: STONE VENEER (1/H2.2)
- 11 SITE WALL: STUCCO (2/H2.2)
- 12 DECORATIVE WALL (8/H2.2)
- 13 SEAT WALL (6/H2.2)
- 14 LOW RETAINING WALL (3/H2.2)
- 15 PLANTER WALL (4/H2.2)
- 16 PLANTER WALL- STUCCO (5/H2.2)
- 17 POOL FENCE (1/H2.3)
- 18 POOL GATE (2/H2.3)
- 20 DOG PARK FENCE (3/H2.3) (4/H2.3)
- 25 ENTRY ACCESS COLUMN (1/H2.7) (2/H2.7)
- 26 DRINKING FOUNTAIN (3/H2.1)
- 28 SHELTER & PAD (4/H2.1)
- 29 PICNIC TABLE (4/H2.1)
- 30 ASPHALT MULTI-USE PATH
- 31 PET WASTE STATION
- 32 BENCH (1/H2.5)
- 34 ARTIFICIAL TURF (3/H2.5)
- 35 CONCRETE HEADER (4/H2.5)
- 36 BUTTERFLY GARDEN (–/H1.4)
- 37 HUMMINGBIRD GARDEN (–/H1.5)
- 44 DRY SWALE BED (8/L2.0)
- 45 STABILIZED DECOMPOSED GRANITE (2/H2.5)
- 48 BICYCLE PARKING (5/H2.1)
- 51 SECONDARY ENTRY GATE (2/H2.6)
- 52 GLASS POOL FENCE (2/H2.3)
- 57 POOL GATE (2/H2.3)
- 58 RETAINING WALL (10/H2.2)
- 59 BOULDERS (7/L2.0)
- 60 REFUSE RECEPTACLE

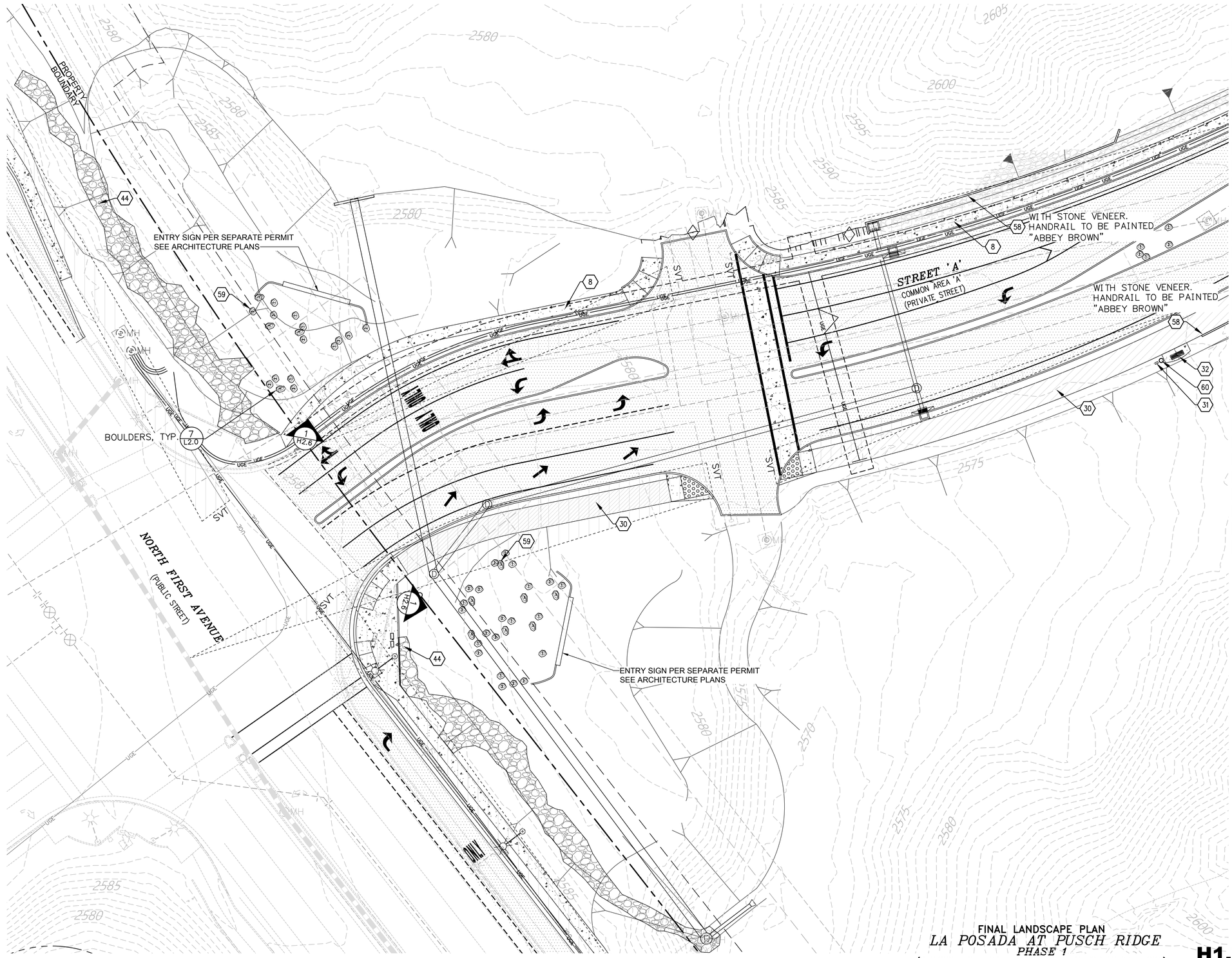

FINAL LANDSCAPE PLAN

LA POSADA AT PUSCH RIDGE

PHASE 1

(REVISION TO FINAL LANDSCAPE PLAN FOR NAKOMA SKY) PHASES 1, 2, 3 AND FUTURE PHASES

ROONEY RANCH AREA Z RECORDED IN BOOK 62 M&P, PAGE 4, LOTS 1–68 AND COMMON AREAS "A", "B", AND "C" BEING A PORTION OF SECTION 7, TOWNSHIP 12 SOUTH, RANGE 14 EAST, G & S.R.M. TOWN OF ORO VALLEY, PIMA COUNTY, ARIZONA

MARCH 2022

WLB NO. 181057–G–E02

CONTOUR INTERVAL: 1' SCALE: 1"=20'

H1.7

REFERENCE CASE #'S:
0V1601351
0V115–027
0V914–008
0V914–007A
0V903–03A
(O)15–14

REGISTERED LANDSCAPE ARCHITECT CERTIFICATE NO. 25621 GARY L. GRIZZLE Date Signed 3/30/22 ARIZONA U.S.A.

Call at least two full working days before you begin excavation. ARIZONA 811 Arizona Blue Stake, Inc. Dial 8-1-1 or 1-800-STAKE-IT (782-5348) In Maricopa County: (602) 263-1100

The WLB Group INC. **WLB**

Engineering Planning Surveying Landscape Architecture Urban Design Offices located in Tucson, Phoenix, Flagstaff, Arizona, and Las Vegas, Nevada

4444 East Broadway Tucson, Arizona (520) 881-7480

0' 20' 40' 60'

Q:\181057\GE-01\02 Landscape\08 FLP\181057 la posada flp 33-H1.7 hardscape.dwg

HARDSCAPE PLAN

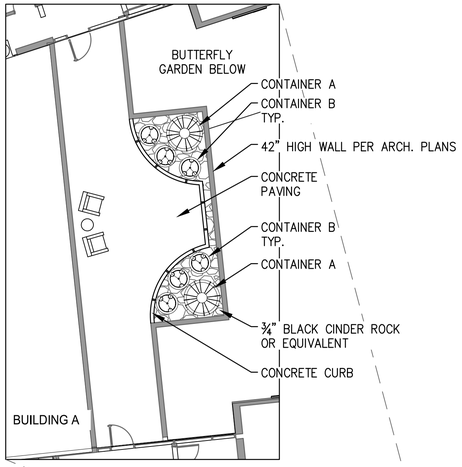

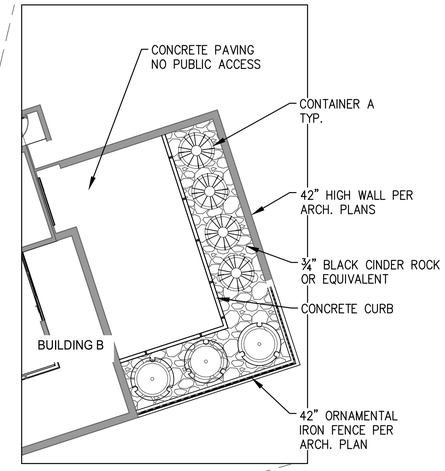

CONTAINER TABLE

CONTAINER	QTY. THIS SHEET	MANUFACTURER MAKE & SIZE
A	23	OLD TOWN FIBERGLASS MODEL: DUNE SERIES DS-6040 COLOR: BRONZE 12 FINISH: SAND SIZE: 60" DIA. X 40" HT. X 28" BASE. PROVIDE SUB-IRRIGATION & DRAINAGE HOLE WEIGHT: 160 lbs
B	8	OLD TOWN FIBERGLASS MODEL: DUNE SERIES DS-4432 COLOR: BRONZE 12 FINISH: SAND SIZE: 44" DIA. X 32" HT. X 20" BASE. PROVIDE SUB-IRRIGATION & DRAINAGE HOLE WEIGHT: 99 lbs

PLANTER LEGEND

SYMBOL	PLANT NAME
	DASYLIRION LONGISSIMUM TOOTHLESS SPOON
	PEDILANTHUS MACROCARPUS LADY'S SLIPPER LADY'S SLIPPER
	SALVIA GREGGII AUTUMN SAGE
	SOPHORA SECUNDIFLORA TEXAS MOUNTAIN LAUREL

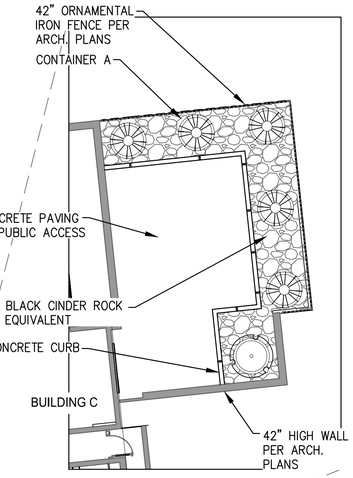

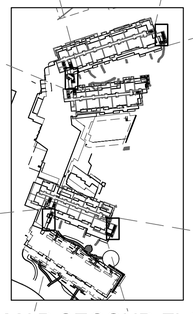

KEY MAP SECOND FLOOR

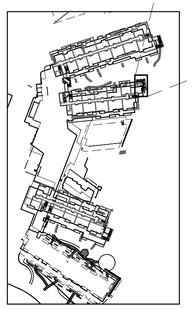

KEY MAP THIRD FLOOR

NOTE:

1. CONTAINERS TO BE TOP DRESSED WITH 1" SCREENED DECORATIVE ROCK.
   COLOR: WILDCAT RED (OR EQUAL).
2. COORDINATE DRAINAGE, IRRIGATION CONDUIT AND SLEEVING WITH GENERAL CONTRACTOR.
3. SHIM CONTAINERS LEVEL AS NEEDED.
4. DUE TO THE CONDITIONED WATER PLANTS AND SOIL MAY NEED TO BE REPLACED PERIODICALLY.

CONTAINERS

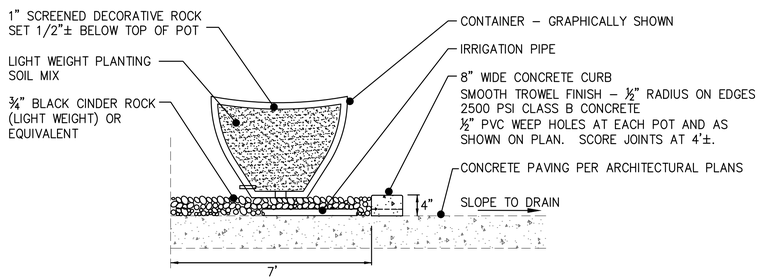

NOTE: WATER PROOFING TO BE APPLIED ON CONCRETE PAVING UNDER CINDER ROCK PER ARCHITECTURAL PLANS.

1 **CONTAINER**

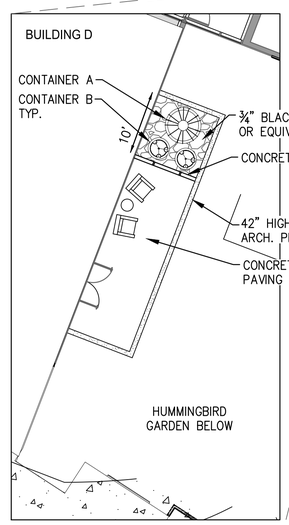

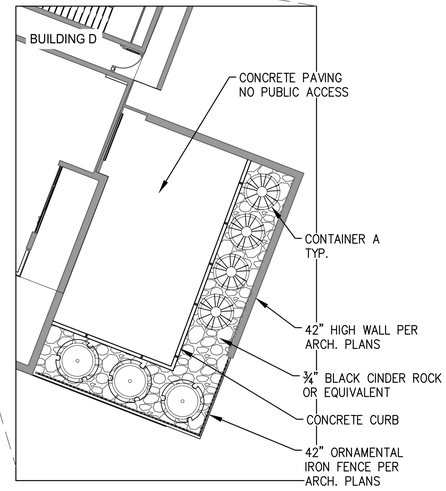

THIRD FLOOR CONTAINER AND PLANTS

SECOND FLOOR CONTAINERS AND PLANTS

CONTAINER PLANTING PLAN

The WLB Group INC. **WLB**
Engineering Planning Surveying
Landscape Architecture Urban Design
Offices located in Tucson, Phoenix, Flagstaff, Arizona, and Las Vegas, Nevada
4444 East Broadway
Tucson, Arizona (520) 881-7480

0' 10' 20' 30'

Q:\181057\GE-01\02 Landscape\08 FLP\181057 la posada flp 34-H1.8 hscape planters.dwg

Call at least two full working days before you begin excavation. ARIZONA 811 Arizona Blue Stake, Inc. Dial 8-1-1 or 1-800-STAKE-IT (782-5348) In Maricopa County (602) 263-1100

REGISTERED LANDSCAPE ARCHITECT CERTIFICATE NO. 25621 GARY L. GRIZZLE 3/30/22 Date Signed ARIZONA, U.S.A.

FINAL LANDSCAPE PLAN
LA POSADA AT PUSCH RIDGE
PHASE 1
(REVISION TO FINAL LANDSCAPE PLAN FOR NAKOMA SKY)
PHASES 1, 2, 3 AND FUTURE PHASES

ROONEY RANCH AREA Z RECORDED IN BOOK 62 M&P, PAGE 4, LOTS 1–68 AND COMMON AREAS "A", "B", AND "C" BEING A PORTION OF SECTION 7, TOWNSHIP 12 SOUTH, RANGE 14 EAST, G & S.R.M. TOWN OF ORO VALLEY, PIMA COUNTY, ARIZONA
MARCH 2022
WLB NO. 181057–G–E02
CONTOUR INTERVAL: 1' SCALE: 1"=10'

H1.8

REFERENCE CASE #'S:
OV1601351
OV115–027
OV914–008
OV914–007A
OV903–03A
(O)15–14

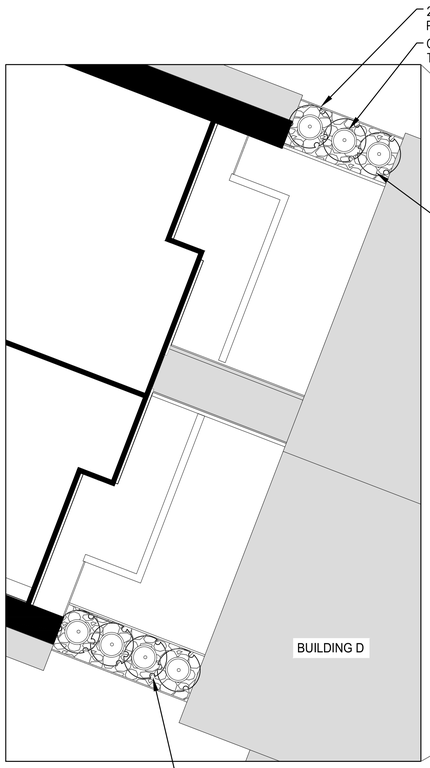

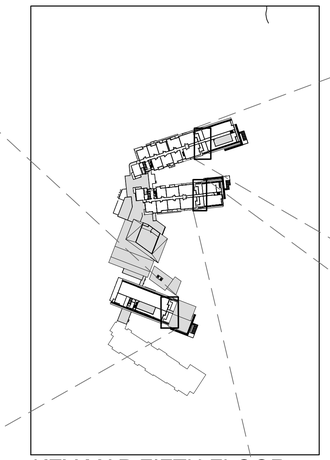

KEY MAP FIFTH FLOOR

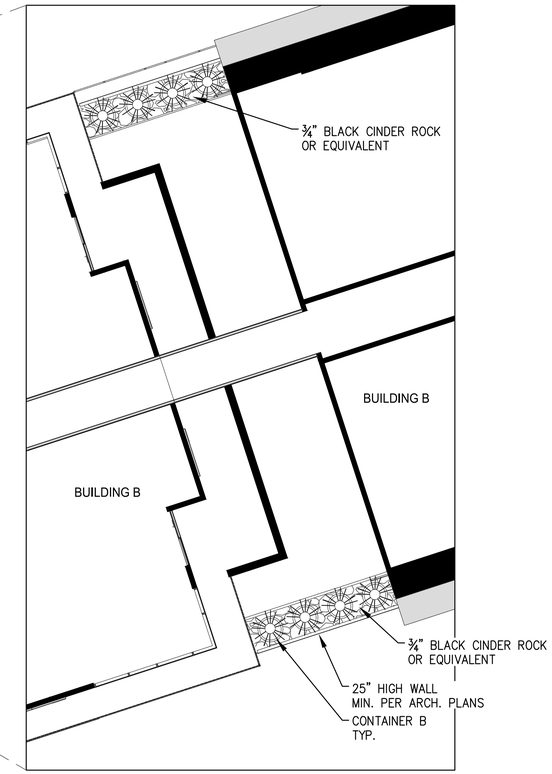

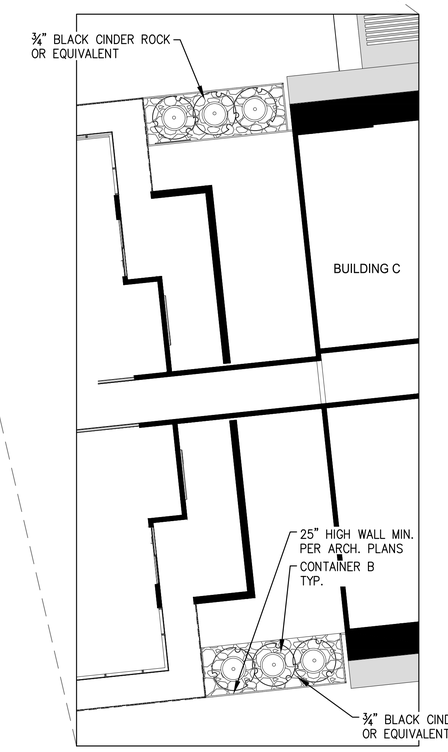

CONTAINER TABLE

CONTAINER	QTY. THIS SHEET	MANUFACTURER MAKE & SIZE
B	21	OLD TOWN FIBERGLASS MODEL: DUNE SERIES DS-4432 COLOR: BRONZE 12 FINISH: SAND SIZE: 44" DIA. X 32" HT. X 20" BASE. PROVIDE SUB-IRRIGATION & DRAINAGE HOLE WEIGHT: 99 lbs

PLANTER LEGEND

SYMBOL	PLANT NAME
	DASYLIRION LONGISSIMUM TOOTHLESS SPOON
	SOPHORA SECUNDIFLORA TEXAS MOUNTAIN LAUREL

NOTE:

SEE SHEET H1.8 FOR NOTES AND DETAILS.

FIFTH FLOOR CONTAINERS AND PLANTS

CONTAINER PLANTING PLAN

The WLB Group INC.
WLB
Engineering Planning Surveying
Landscape Architecture Urban Design
Offices located in Tucson, Phoenix, Flagstaff, Arizona, and Las Vegas, Nevada
4444 East Broadway
Tucson, Arizona (520) 881-7480

0' 10' 20' 30'

Q:\181057\GE-01\02 Landscape\08 FLP\181057 la posada flp 35-H1.9 hscape planters.dwg

Call at least two full working days before you begin excavation.
ARIZONA 811
Arizona Blue Stake, Inc.
Dial 8-1-1 or 1-800-STAKE-IT (782-5348)
In Maricopa County: (602) 263-1100

REGISTERED LANDSCAPE ARCHITECT
CERTIFICATE NO. 25621
GARY L. GRIZZLE
Date Signed 3/30/22
ARIZONA U.S.A.

FINAL LANDSCAPE PLAN
LA POSADA AT PUSCH RIDGE
PHASE 1
(REVISION TO FINAL LANDSCAPE PLAN FOR NAKOMA SKY)
PHASES 1, 2, 3 AND FUTURE PHASES

ROONEY RANCH AREA Z RECORDED IN BOOK 62 M&P, PAGE 4, LOTS 1–68 AND COMMON AREAS "A", "B", AND "C" BEING A PORTION OF SECTION 7, TOWNSHIP 12 SOUTH, RANGE 14 EAST, G & S.R.M. TOWN OF ORO VALLEY, PIMA COUNTY, ARIZONA

MARCH 2022
WLB NO. 181057–G–E02
CONTOUR INTERVAL: 1' SCALE: 1"=10'

H1.9

REFERENCE CASE #'S:
OV1601351
OV115–027
OV914–008
OV914–007A
OV903–03A
(O)15–14

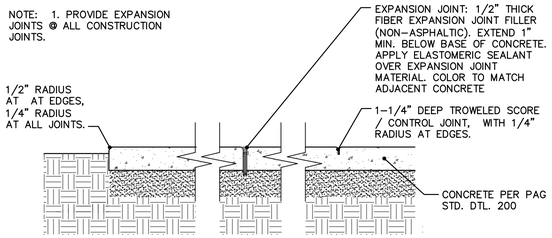

1 CONCRETE JOINTS
NTS

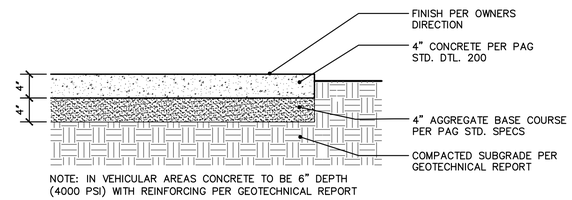

2 CONCRETE PAVING-PEDESTRIAN

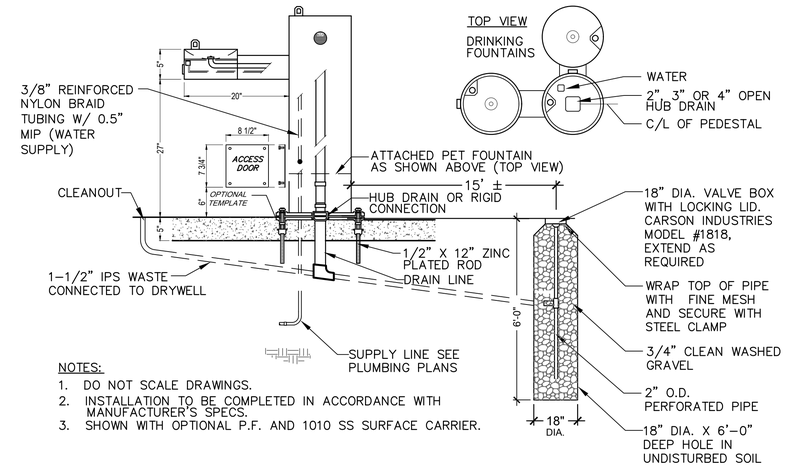

NOTES:
1. DO NOT SCALE DRAWINGS.
2. INSTALLATION TO BE COMPLETED IN ACCORDANCE WITH MANUFACTURER'S SPECS.
3. SHOWN WITH OPTIONAL P.F. AND 1010 SS SURFACE CARRIER.

3 DRINKING FOUNTAIN WITH DRAINAGE SUMP (ADA VERSION SHOWN)
SCALE: NTS

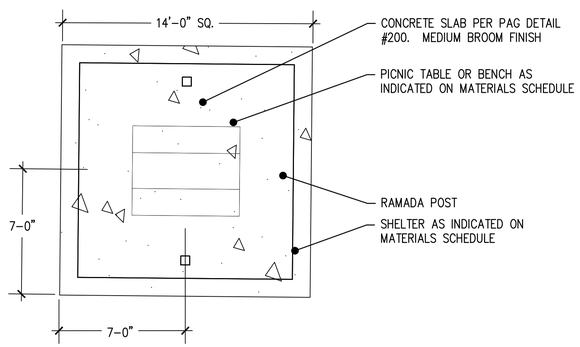

4 RAMADA AND PAD AT TRAILHEAD

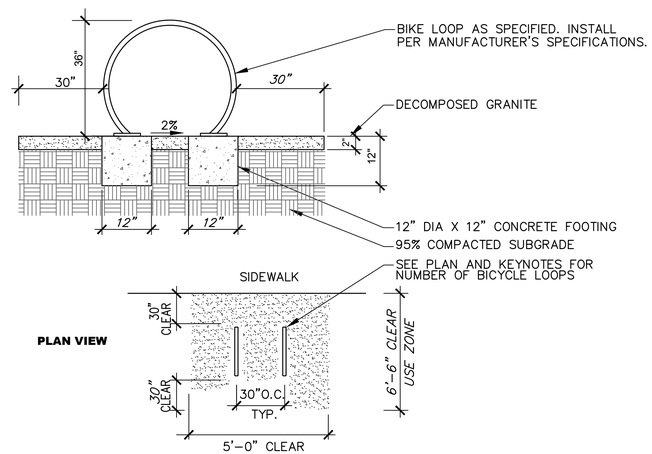

5 BICYCLE PARKING
SCALE: NTS

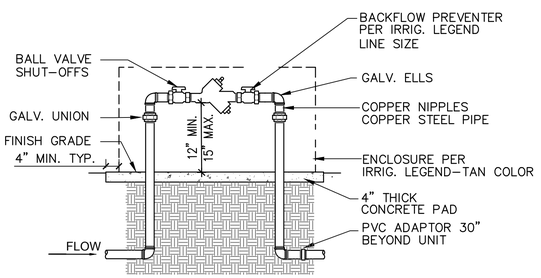

NOTE: PROVIDE BACKFLOW TESTING PER WATER CO. STD.
PROVIDE R30 "FROSTGUARD" BLANKET

6 BACKFLOW PREVENTER
SCALE: NTS

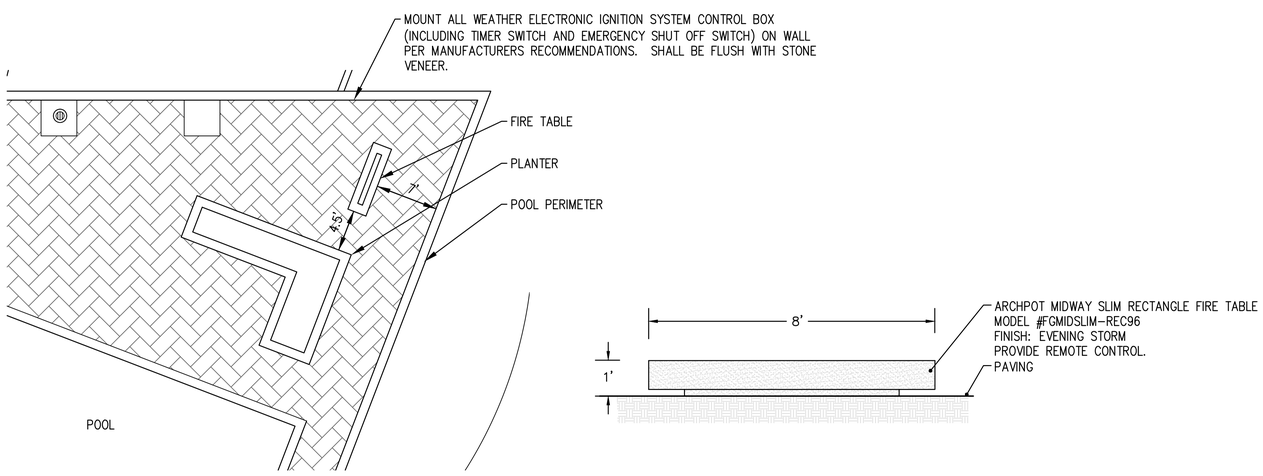

7 FIRE TABLE

ALL WALLS, SLABS, FOOTINGS AND REINFORCEMENT PER STRUCTURAL ENGINEERING DRAWINGS

The WLB Group INC.
WLB
Engineering Planning Surveying
Landscape Architecture Urban Design
Offices located in Tucson, Phoenix, Flagstaff, Arizona, and Las Vegas, Nevada
4444 East Broadway
Tucson, Arizona (520) 881-7480

Q:\181057\GE-01\02 Landscape\08 FLP\181057 la posada flp 36-H 2.1 hscape details.dwg

HARDSCAPE DETAILS

Call at least two full working days before you begin excavation. ARIZONA 811 Arizona Blue Stake, Inc. Dial 8-1-1 or 1-800-STAKE-IT (782-5348) In Maricopa County: (602) 263-1100.

REGISTERED LANDSCAPE ARCHITECT CERTIFICATE NO. 25621 GARY L. GRIZZLE Date Signed 3/30/22 ARIZONA U.S.A.

FINAL LANDSCAPE PLAN
LA POSADA AT PUSCH RIDGE
PHASE 1
(REVISION TO FINAL LANDSCAPE PLAN FOR NAKOMA SKY)
PHASES 1, 2, 3 AND FUTURE PHASES

ROONEY RANCH AREA Z RECORDED IN BOOK 62 M&P, PAGE 4, LOTS 1-68 AND COMMON AREAS "A", "B", AND "C" BEING A PORTION OF SECTION 7, TOWNSHIP 12 SOUTH, RANGE 14 EAST, G & S.R.M. TOWN OF ORO VALLEY, PIMA COUNTY, ARIZONA

MARCH 2022
WLB NO. 181057-G-E02
CONTOUR INTERVAL: 1' SCALE: 1"=40'

H2.1

REFERENCE CASE #'S:
OV1601351
OV115-027
OV914-008
OV914-007A
OV903-03A
(O)15-14

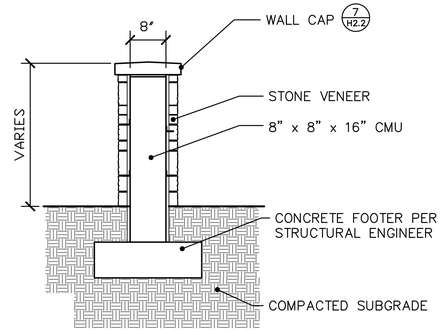

1 SITE WALL-STONE VENEER FACE
NTS

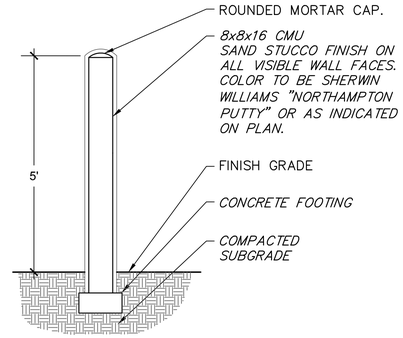

2 SITE WALL-STUCCO FACE
NTS

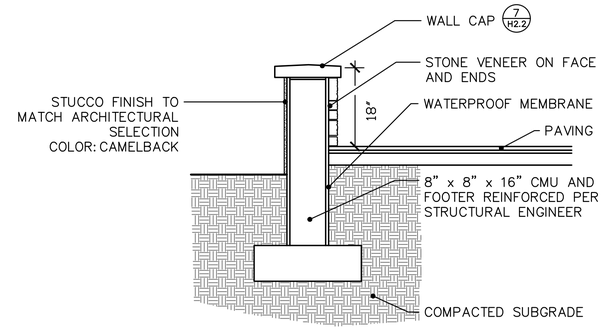

3 RETAINING WALL (STONE VENEER & STUCCO FACE)
NTS

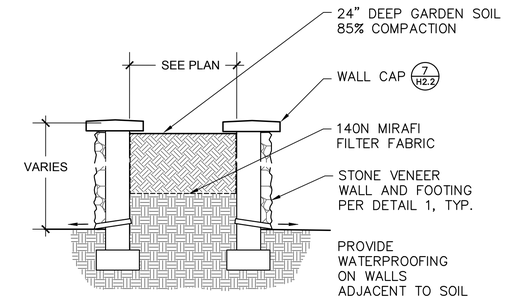

4 PLANTER WALL - STONE VENEER

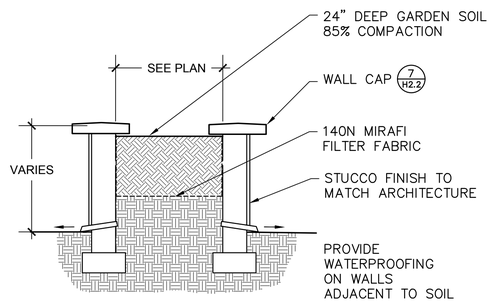

5 PLANTER WALL - STUCCO
NTS

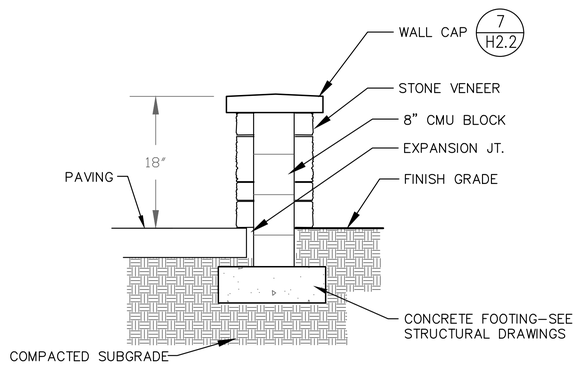

6 SEAT WALL
NTS

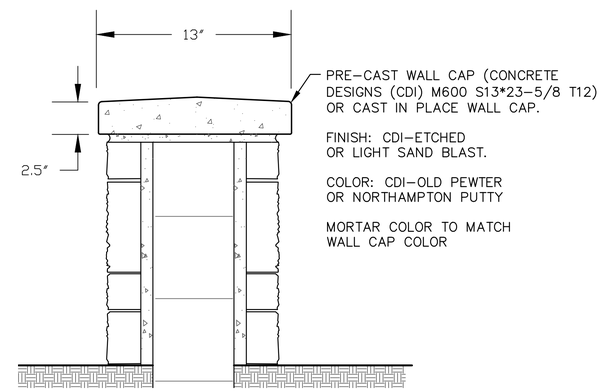

7 WALL CAP
NTS

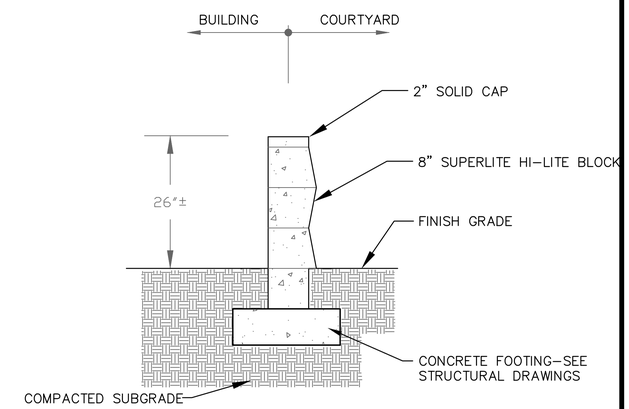

NOTE:
1. MORTAR COLOR TO MATCH BLOCK.
2. SUBMIT BLOCK COLORS FOR APPROVAL.

8 DECORATIVE WALL
NTS

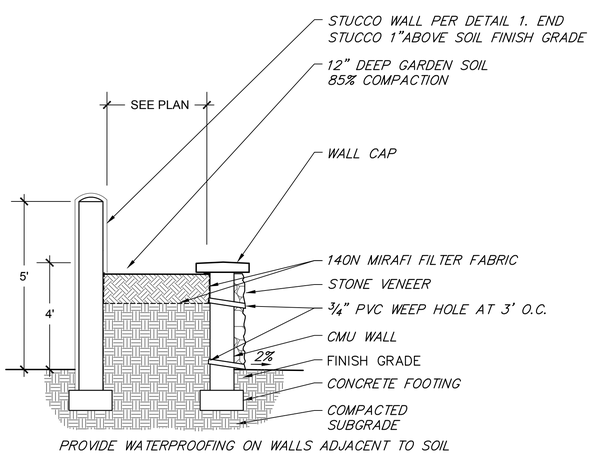

9 PLANTER SECTION "A"
NTS

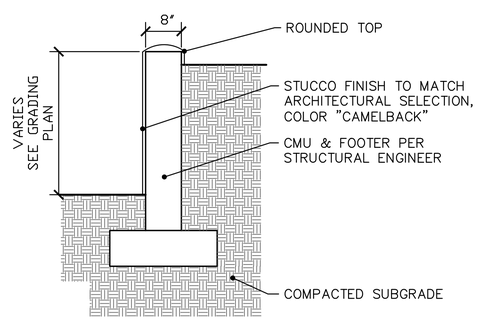

10 RETAINING WALL
NTS

ALL WALLS, SLABS, FOOTINGS AND REINFORCEMENT PER STRUCTURAL ENGINEERING DRAWINGS

HARDSCAPE DETAILS

The WLB Group INC. **WLB**
Engineering Planning Surveying
Landscape Architecture Urban Design
Offices located in Tucson, Phoenix, Flagstaff, Arizona, and Las Vegas, Nevada
4444 East Broadway
Tucson, Arizona (520) 881-7480

Call at least two full working days before you begin excavation. ARIZONA 811 Arizona Blue Stake, Inc. Dial 8-1-1 or 1-800-STAKE-IT (782-5348) In Maricopa County: (602) 263-1100

REGISTERED LANDSCAPE ARCHITECT CERTIFICATE NO. 25621 GARY L. GRIZZLE Date Signed 3/30/22 ARIZONA, U.S.A.

FINAL LANDSCAPE PLAN
LA POSADA AT PUSCH RIDGE
PHASE 1
(REVISION TO FINAL LANDSCAPE PLAN FOR NAKOMA SKY)
PHASES 1, 2, 3 AND FUTURE PHASES

ROONEY RANCH AREA Z RECORDED IN BOOK 62 M&P, PAGE 4, LOTS 1-68 AND COMMON AREAS "A", "B", AND "C" BEING A PORTION OF SECTION 7, TOWNSHIP 12 SOUTH, RANGE 14 EAST, G & S.R.M. TOWN OF ORO VALLEY, PIMA COUNTY, ARIZONA

MARCH 2022
WLB NO. 181057-G-E02

H2.2

REFERENCE CASE #'S:
0V1601351
0V115-027
0V914-008
0V914-007A
0V903-03A
(0)15-14

Q:\181057\GE-01\02 Landscape\08 FLP\181057 la posada flp 37-H 2.2 hscape details.dwg

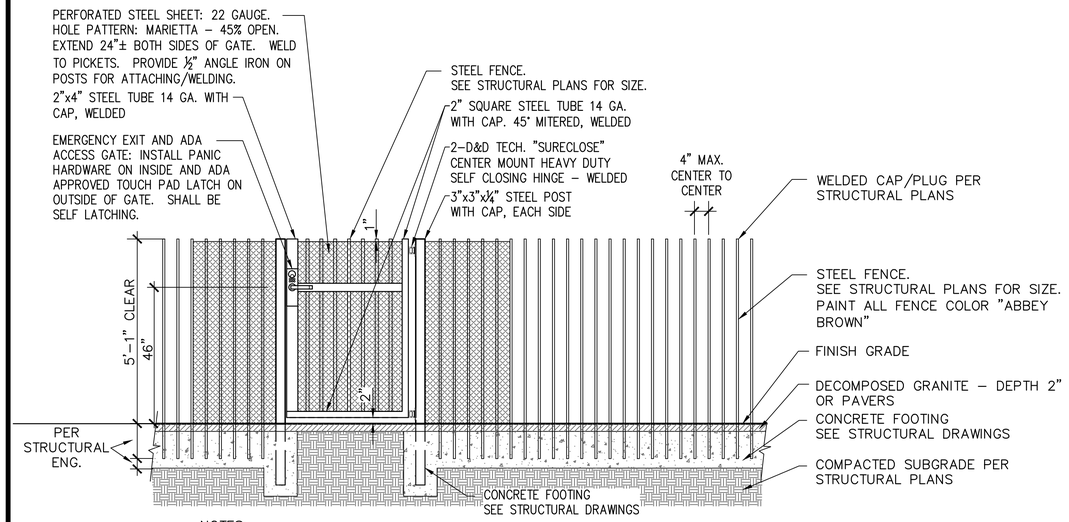

NOTES:
1. STEEL PICKETS SHALL BE STIFF AND NOT ALLOW A GAP OF MORE THAN 4 INCHES TO OCCUR.
2. GRIND ALL EDGES SMOOTH.
3. FENCE AND GATE SHALL BE PRIMED AND PAINTED PER PAG STANDARDS. COLOR "ABBEY BROWN".
4. GATE AT POOL TO SWING OUT AWAY FROM ENCLOSED POOL AREA.

1 POOL FENCE AND GATE ELEVATION
SCALE: NTS

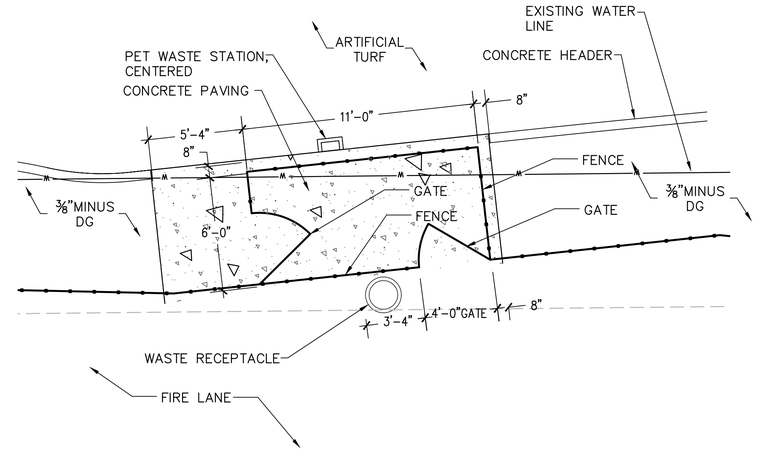

NOTES:
1. CONTRACTOR TO LOCATE EXISTING WATER LINE PRIOR TO CONSTRUCTION. ADJUST POST FOOTINGS AS NECESSARY.

4 DOG PARK GATE AREA
SCALE: NTS

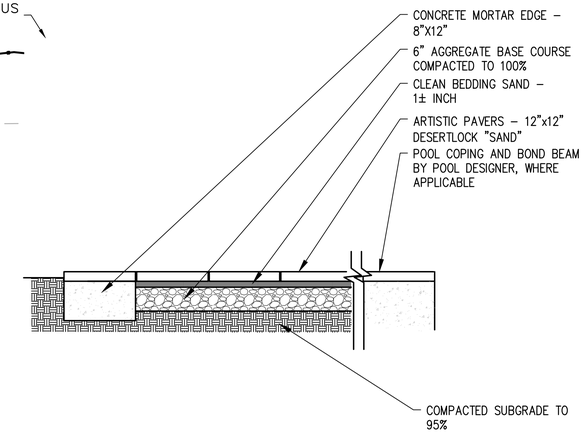

5 PAVERS
SCALE: NTS

POOL FENCE AND POOL GATE (ORNAMENTAL IRON AND GLASS) SHALL MEET ALL PROVISIONS OF THE ORO VALLEY POOL AND SPA CODE

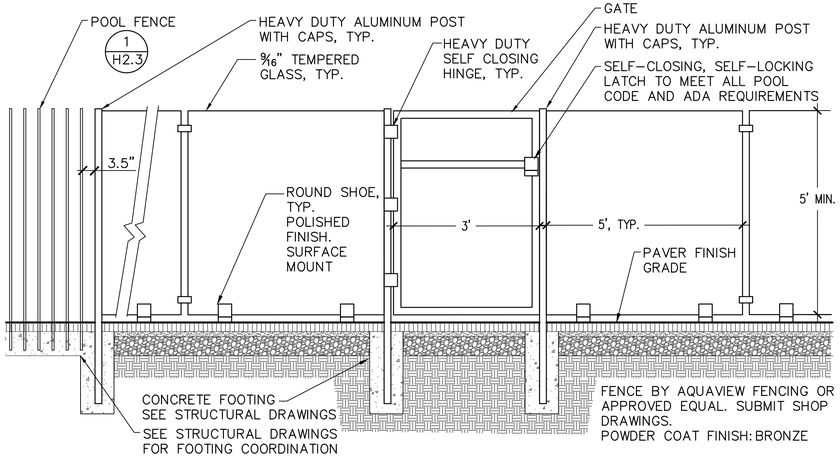

2 GLASS POOL FENCE ELEVATION
SCALE: NTS

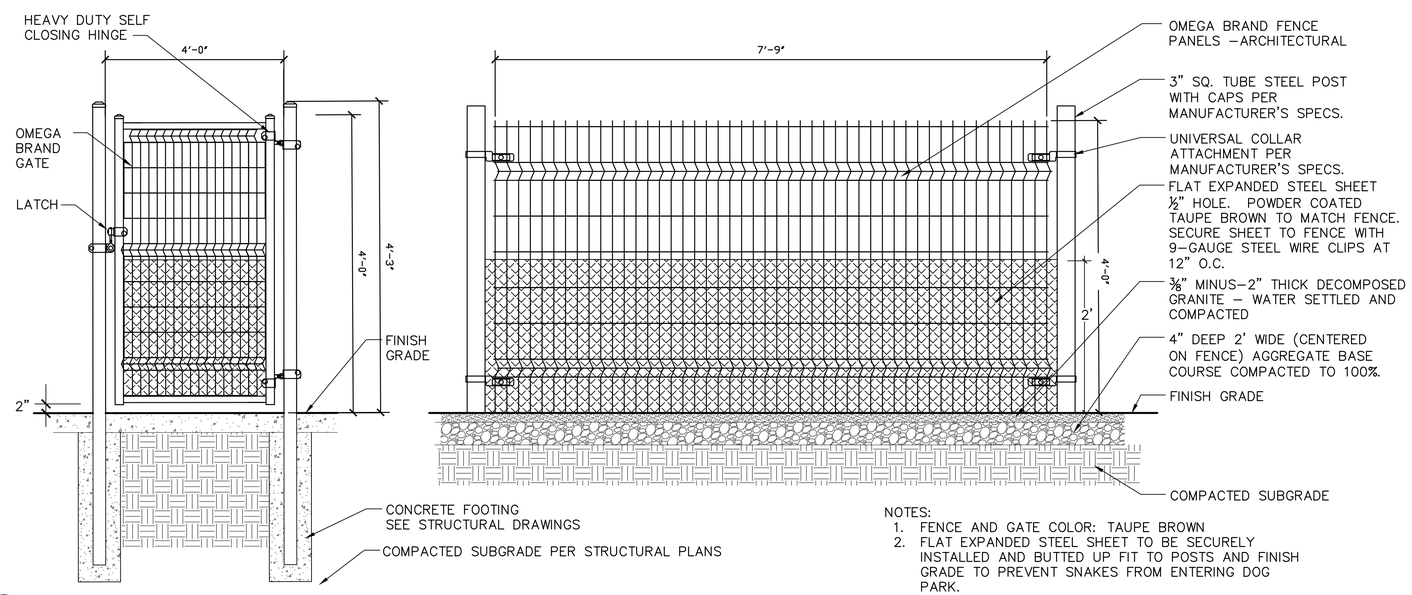

NOTES:
1. FENCE AND GATE COLOR: TAUPE BROWN
2. FLAT EXPANDED STEEL SHEET TO BE SECURELY INSTALLED AND BUTTED UP FIT TO POSTS AND FINISH GRADE TO PREVENT SNAKES FROM ENTERING DOG PARK.

3 DOG PARK GATE & FENCE ELEVATION
SCALE: NTS

ALL FOOTINGS AND REINFORCEMENT PER STRUCTURAL ENGINEERING DRAWINGS

CONTRACTOR TO PROVIDE SHOP DRAWINGS FOR ALL METALWORK

HARDSCAPE DETAILS

The WLB Group INC. **WLB**
Engineering Planning Surveying
Landscape Architecture Urban Design
Offices located in Tucson, Phoenix, Flagstaff, Arizona, and Las Vegas, Nevada
4444 East Broadway
Tucson, Arizona (520) 881-7480

Q:\181057\GE-01\02 Landscape\08 FLP\181057 la posada flp 38-H 2.3 hscape details.dwg

Call at least two full working days before you begin excavation.
ARIZONA 811 Blue Stake, Inc.
Dial 8-1-1 or 1-800-STAKE-IT (782-5348)
In Maricopa County: (602) 263-1100

REGISTERED LANDSCAPE ARCHITECT CERTIFICATE NO. 25621 GARY L. GRIZZLE Date Signed 3/30/22 ARIZONA U.S.A.

FINAL LANDSCAPE PLAN
LA POSADA AT PUSCH RIDGE
PHASE 1
(REVISION TO FINAL LANDSCAPE PLAN FOR NAKOMA SKY)
PHASES 1, 2, 3 AND FUTURE PHASES

ROONEY RANCH AREA Z RECORDED IN BOOK 62 M&P, PAGE 4, LOTS 1–68 AND COMMON AREAS "A", "B", AND "C" BEING A PORTION OF SECTION 7, TOWNSHIP 12 SOUTH, RANGE 14 EAST, G & S.R.M. TOWN OF ORO VALLEY, PIMA COUNTY, ARIZONA

MARCH 2022
WLB NO. 181057–G–E02
CONTOUR INTERVAL: 1'

H2.3

REFERENCE CASE #'S:
0V1601351
0V115–027
0V914–008
0V914–007A
0V903–03A
(O)15–14

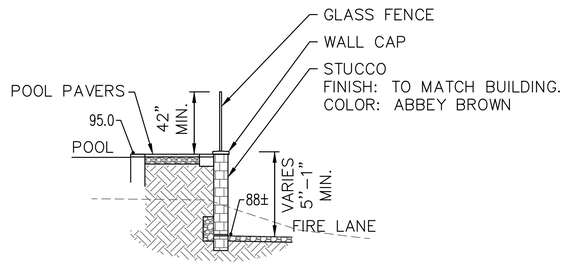

1 **POOL AREA - CROSS SECTION**

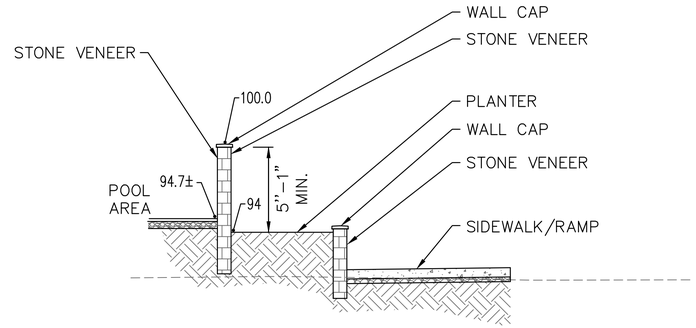

2 **POOL AREA - CROSS SECTION**

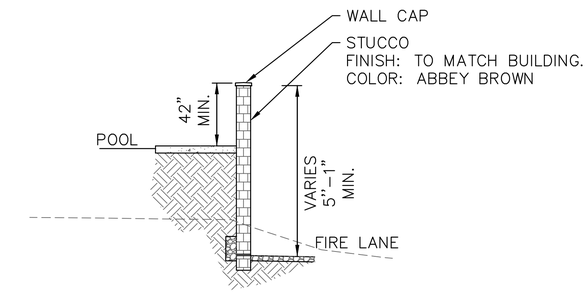

3 **POOL AREA - CROSS SECTION**

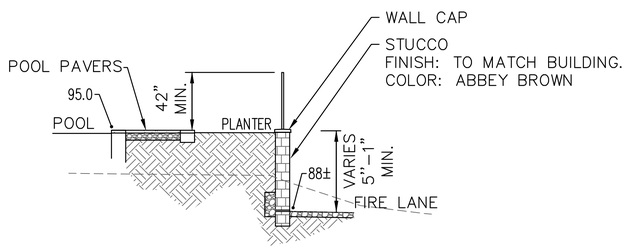

4 **POOL AREA - CROSS SECTION**

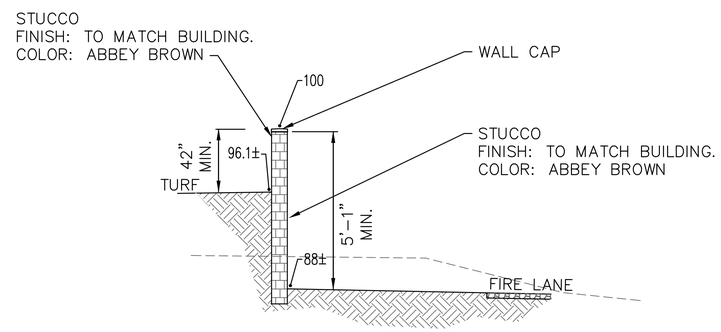

5 **POOL - TURF AREA - CROSS SECTION**

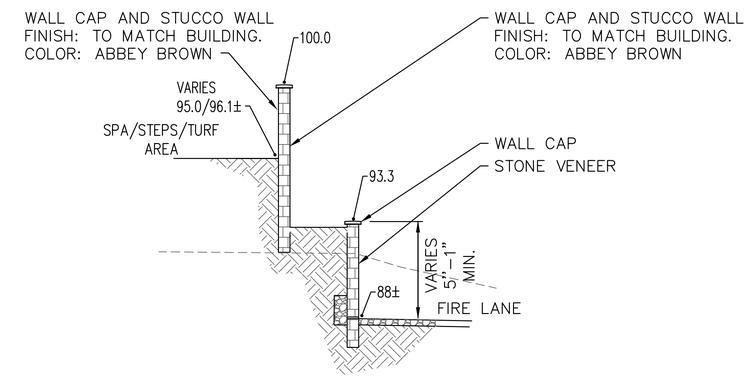

6 **SPA AREA - CROSS SECTION**

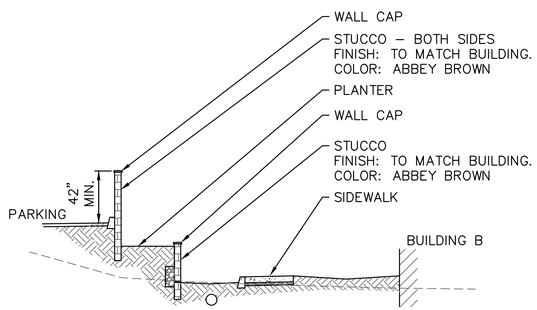

7 **WALL AT BUILDING**

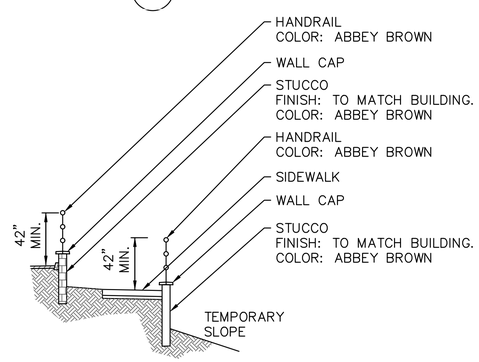

8 **WALL AT BUILDING**

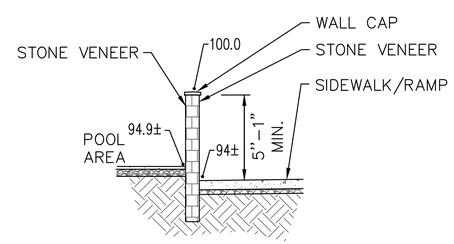

9 **POOL AREA - CROSS SECTION**

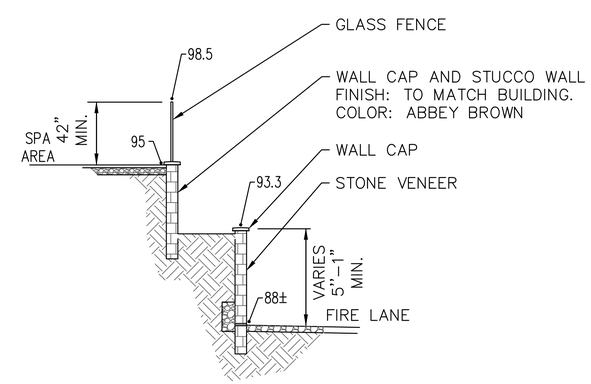

10 **SPA AREA - CROSS SECTION**

The WLB Group INC. **WLB**

Engineering Planning Surveying
Landscape Architecture Urban Design
Offices located in Tucson, Phoenix, Flagstaff, Arizona, and Las Vegas, Nevada
4444 East Broadway
Tucson, Arizona (520) 881-7480

ALL FOOTINGS AND REINFORCEMENT PER STRUCTURAL ENGINEERING DRAWINGS

Q:\181057\GE-01\02 Landscape\08 FLP\181057 la posada flp 39-H 2.4 hscape details.dwg

HARDSCAPE DETAILS

Call at least two full working days before you begin excavation.
ARIZONA 811
Arizona Blue Stake, Inc.
Dial 8-1-1 or 1-800-STAKE-IT (782-5348)
In Maricopa County: (602) 263-1100

REGISTERED LANDSCAPE ARCHITECT
CERTIFICATE NO. 25621
GARY L. GRIZZLE
Date Signed 3/30/22
ARIZONA U.S.A.

FINAL LANDSCAPE PLAN
LA POSADA AT PUSCH RIDGE
PHASE 1
(REVISION TO FINAL LANDSCAPE PLAN FOR NAKOMA SKY)
PHASES 1, 2, 3 AND FUTURE PHASES

ROONEY RANCH AREA Z RECORDED IN BOOK 62 M&P, PAGE 4, LOTS 1–68 AND COMMON AREAS "A", "B", AND "C" BEING A PORTION OF SECTION 7, TOWNSHIP 12 SOUTH, RANGE 14 EAST, G & S.R.M. TOWN OF ORO VALLEY, PIMA COUNTY, ARIZONA

MARCH 2022
WLB NO. 181057–G–E02
CONTOUR INTERVAL: 1'

H2.4

REFERENCE CASE #'S:
0V1601351
0V115–027
0V914–008
0V914–007A
0V903–03A
(O)15–14

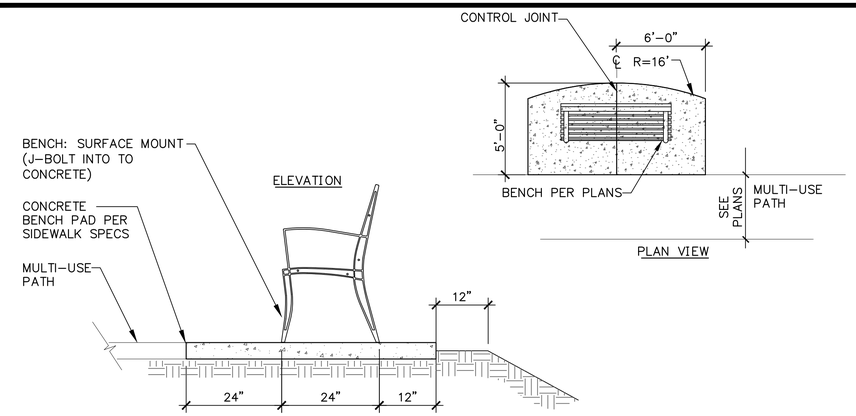

1 BENCH & CONCRETE PAD

SCALE: NTS

NOTES:
1. APPLY PRE-EMERGENT HERBICIDE TO SUBGRADE SURFACE.
2. FOLLOW STABILIZER MANUFACTURER'S RECOMMENDATIONS FOR INSTALLATION OF PATHWAY.

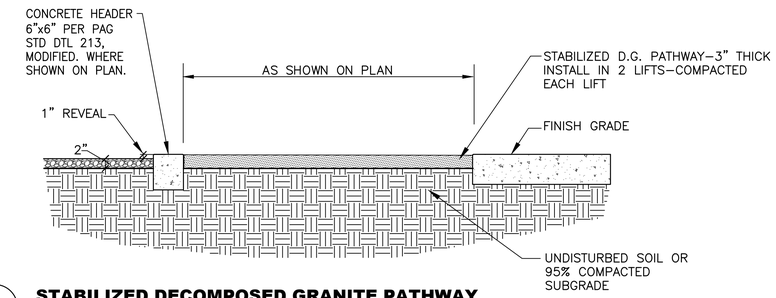

2 STABILIZED DECOMPOSED GRANITE PATHWAY

SCALE: NTS

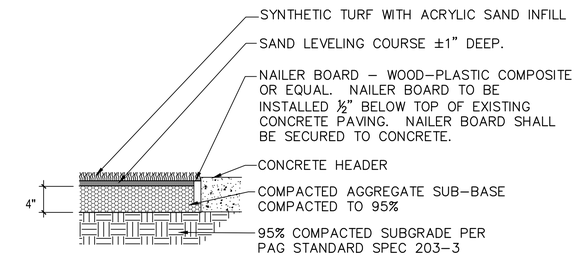

1. INSTALL SYNTHETIC GRASS PER MANUFACTURER'S RECOMMENDATIONS.
2. EDGE OF TURF TO BE SECURED TO NAILER BOARD WITH MECHANICAL FASTENERS AT 8" ON CENTER MINIMUM PER MANUFACTURERS RECOMMENDATION.

3 ARTIFICIAL TURF

SCALE: NTS

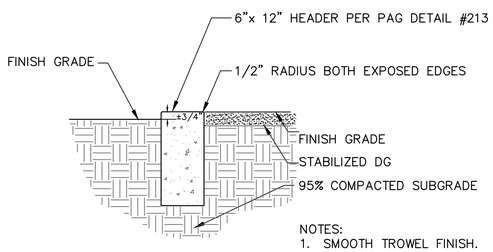

NOTES:
1. SMOOTH TROWEL FINISH.
2. 1" DEEP CONTROL JOINTS AT 5' ON CENTER.
3. 1/4" EXPANSION JOINTS WITH BITUMINOUS JOINT FILLER AT 40' ON CENTER.

4 6" CONCRETE HEADER

SCALE: NTS

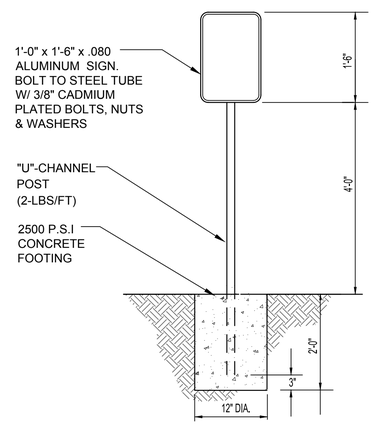

CONTRACTOR TO PROVIDE SIGN MOCK UPS FOR OWNERS REVIEW AND APPROVAL.

5 EARTHEN TRAIL SIGN

SCALE: NTS

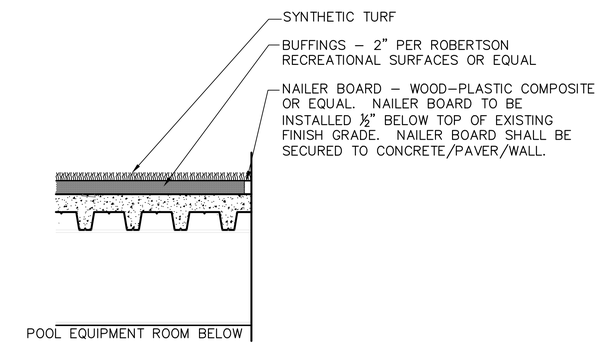

1. INSTALL SYNTHETIC GRASS PER MANUFACTURER'S RECOMMENDATIONS.
2. EDGE OF TURF TO BE SECURED TO NAILER BOARD WITH MECHANICAL FASTENERS AT 8" ON CENTER MINIMUM PER MANUFACTURERS RECOMMENDATION.

6 ARTIFICIAL TURF OVER POOL EQUIPMENT ROOM

SCALE: NTS

The WLB Group INC. WLB
Engineering Planning Surveying
Landscape Architecture Urban Design
Offices located in Tucson, Phoenix, Flagstaff, Arizona, and Las Vegas, Nevada
4444 East Broadway
Tucson, Arizona (520) 881-7480

Q:\181057\GE-01\02 Landscape\08 FLP\181057 la posada flp 40-H 2.5 hscape details.dwg

HARDSCAPE DETAILS

Call at least two full working days before you begin excavation. ARIZONA 811 Arizona Blue Stake, Inc. Dial 8-1-1 or 1-800-STAKE-IT (782-5348) In Maricopa County (602) 263-1100

REGISTERED LANDSCAPE ARCHITECT CERTIFICATE NO. 25621 GARY L. GRIZZLE 3/30/22 Date Signed ARIZONA U.S.A.

FINAL LANDSCAPE PLAN
LA POSADA AT PUSCH RIDGE
PHASE 1
(REVISION TO FINAL LANDSCAPE PLAN FOR NAKOMA SKY)
PHASES 1, 2, 3 AND FUTURE PHASES

ROONEY RANCH AREA Z RECORDED IN BOOK 62 M&P, PAGE 4, LOTS 1-68 AND COMMON AREAS "A", "B", AND "C" BEING A PORTION OF SECTION 7, TOWNSHIP 12 SOUTH, RANGE 14 EAST, G & S.R.M. TOWN OF ORO VALLEY, PIMA COUNTY, ARIZONA

MARCH 2022
WLB NO. 181057-G-E02
CONTOUR INTERVAL: 1' SCALE: N/A

H2.5

REFERENCE CASE #'S:
OV1601351
OV115-027
OV914-008
OV914-007A
OV903-03A
(O)15-14

NOTES:
1. SIGN ON BOTH SIDES OF ENTRY DRIVE.
2. SIGN IS CONCEPTUAL AND SUBJECT TO CHANGE.
3. SEE ARCHITECTURAL PLANS FOR DETAILING OF SIGN.
4. SIGN TO BE UNDER SEPARATE PERMIT.
5. SIGNS ARE FOR REFERENCE ONLY – SEPARATE APPROVAL AND PERMIT REQUIRED.

1 PRIMARY ENTRY WALL

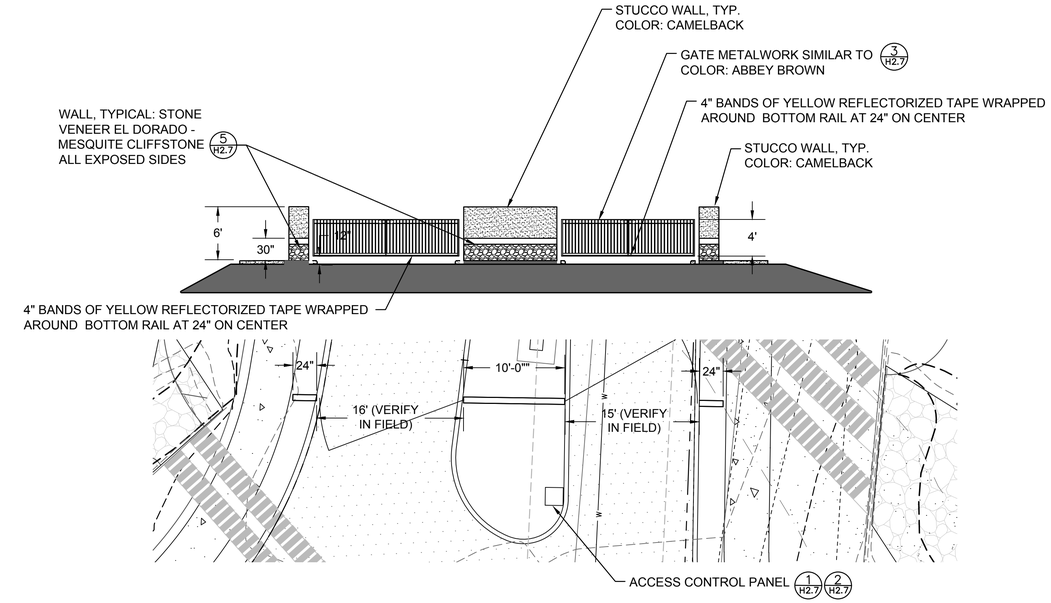

2 SECONDARY ENTRY GATE

SCALE: 1/8" = 1'-0"

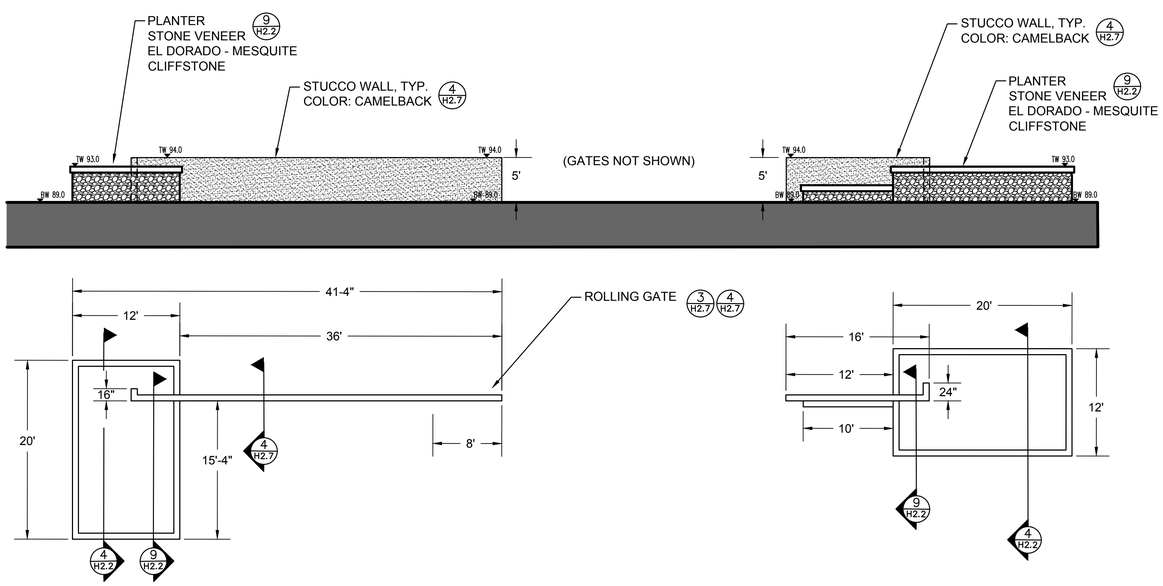

3 ENTRY GATE WALLS (AT BUILDING)

SCALE: 1/8" = 1'-0"

ALL FOOTINGS AND REINFORCEMENT PER STRUCTURAL ENGINEERING DRAWINGS

CONTRACTOR TO PROVIDE SHOP DRAWINGS FOR ALL METALWORK

HARDSCAPE DETAILS

The WLB Group INC.
WLB
Engineering Planning Surveying
Landscape Architecture Urban Design
Offices located in Tucson, Phoenix, Flagstaff, Arizona, and Las Vegas, Nevada
4444 East Broadway
Tucson, Arizona (520) 881-7480

Q:\181057\GE-01\02 Landscape\08 FLP\181057 la posada flp 41-H 2.6 hscape details.dwg

Call at least two full working days before you begin excavation.
ARIZONA 811
Arizona Blue Stake, Inc.
Dial 8-1-1 or 1-800-STAKE-IT (782-5348)
In Maricopa County: (602) 263-1100

REGISTERED LANDSCAPE ARCHITECT
CERTIFICATE NO. 25621
GARY L. GRIZZLE
Date Signed 3/30/22
ARIZONA, U.S.A.

FINAL LANDSCAPE PLAN
LA POSADA AT PUSCH RIDGE
PHASE 1
(REVISION TO FINAL LANDSCAPE PLAN FOR NAKOMA SKY)
PHASES 1, 2, 3 AND FUTURE PHASES

ROONEY RANCH AREA Z RECORDED IN BOOK 62 M&P, PAGE 4, LOTS 1–68 AND COMMON AREAS "A", "B", AND "C" BEING A PORTION OF SECTION 7, TOWNSHIP 12 SOUTH, RANGE 14 EAST, G & S.R.M. TOWN OF ORO VALLEY, PIMA COUNTY, ARIZONA

MARCH 2022
WLB NO. 181057–G–E02
CONTOUR INTERVAL: 1'

H2.6

REFERENCE CASE #'S:
OV1601351
OV115–027
OV914–008
OV914–007A
OV903–03A
(O)15–14

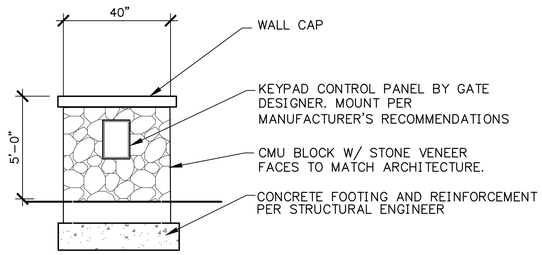

1 ACCESS CONTROL COLUMN (FRONT)

SCALE: NTS

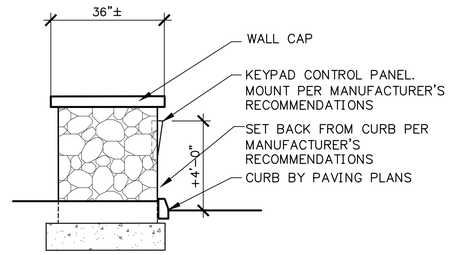

2 ACCESS CONTROL COLUMN (SIDE)

SCALE: NTS

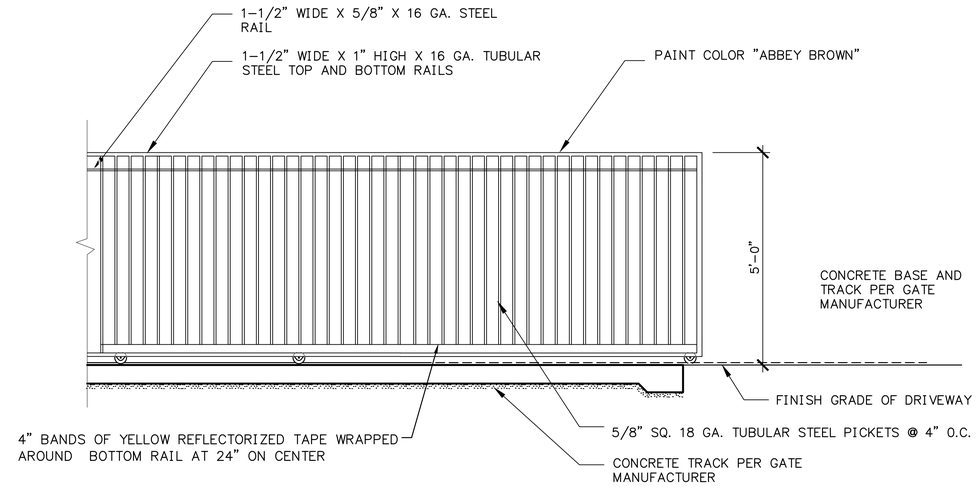

3 ROLLING GATE (AT BUILDING) - ELEVATION

SCALE: 1/8" = 1'-0"

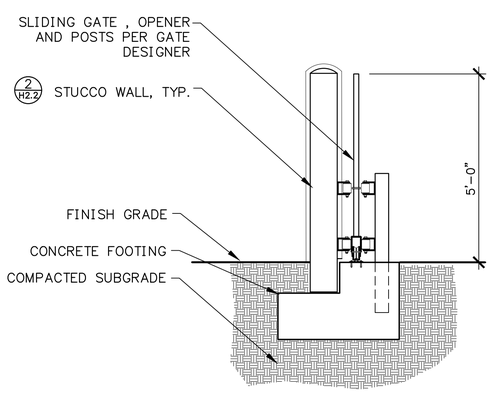

4 ENTRY GATE & WALL-SECTION (AT BUILDING)

SCALE: 1/8" = 1'-0"

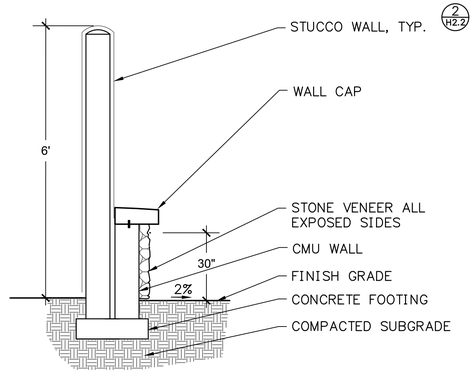

5 SECONDARY ENTRY GATE - WALL-SECTION

SCALE: 1/8" = 1'-0"

ALL FOOTINGS AND REINFORCEMENT PER STRUCTURAL ENGINEERING DRAWINGS

CONTRACTOR TO PROVIDE SHOP DRAWINGS FOR ALL METALWORK

ENTRY AREA

The WLB Group INC. WLB
Engineering Planning Surveying
Landscape Architecture Urban Design
Offices located in Tucson, Phoenix, Flagstaff, Arizona, and Las Vegas, Nevada
4444 East Broadway
Tucson, Arizona (520) 881-7480

Q:\181057\GE-01\02 Landscape\08 FLP\181057 la posada flp 42-H 2.7 entry columns.dwg

Call at least two full working days before you begin excavation. ARIZONA 811 Arizona Blue Stake, Inc. Dial 8-1-1 or 1-800-STAKE-IT (782-5348) In Maricopa County: (602) 263-1100

REGISTERED LANDSCAPE ARCHITECT CERTIFICATE NO. 25621 GARY L. GRIZZLE Date Signed 3/30/22 ARIZONA U.S.A.

FINAL LANDSCAPE PLAN
LA POSADA AT PUSCH RIDGE
PHASE 1
(REVISION TO FINAL LANDSCAPE PLAN FOR NAKOMA SKY)
PHASES 1, 2, 3 AND FUTURE PHASES

ROONEY RANCH AREA Z RECORDED IN BOOK 62 M&P, PAGE 4, LOTS 1-68 AND COMMON AREAS "A", "B", AND "C" BEING A PORTION OF SECTION 7, TOWNSHIP 12 SOUTH, RANGE 14 EAST, G & S.R.M. TOWN OF ORO VALLEY, PIMA COUNTY, ARIZONA

MARCH 2022
WLB NO. 181057-G-E02
CONTOUR INTERVAL: 1' SCALE:

H2.7

REFERENCE CASE #'S:
0V1601351
0V115-027
0V914-008
0V914-007A
0V903-03A
(O)15-14

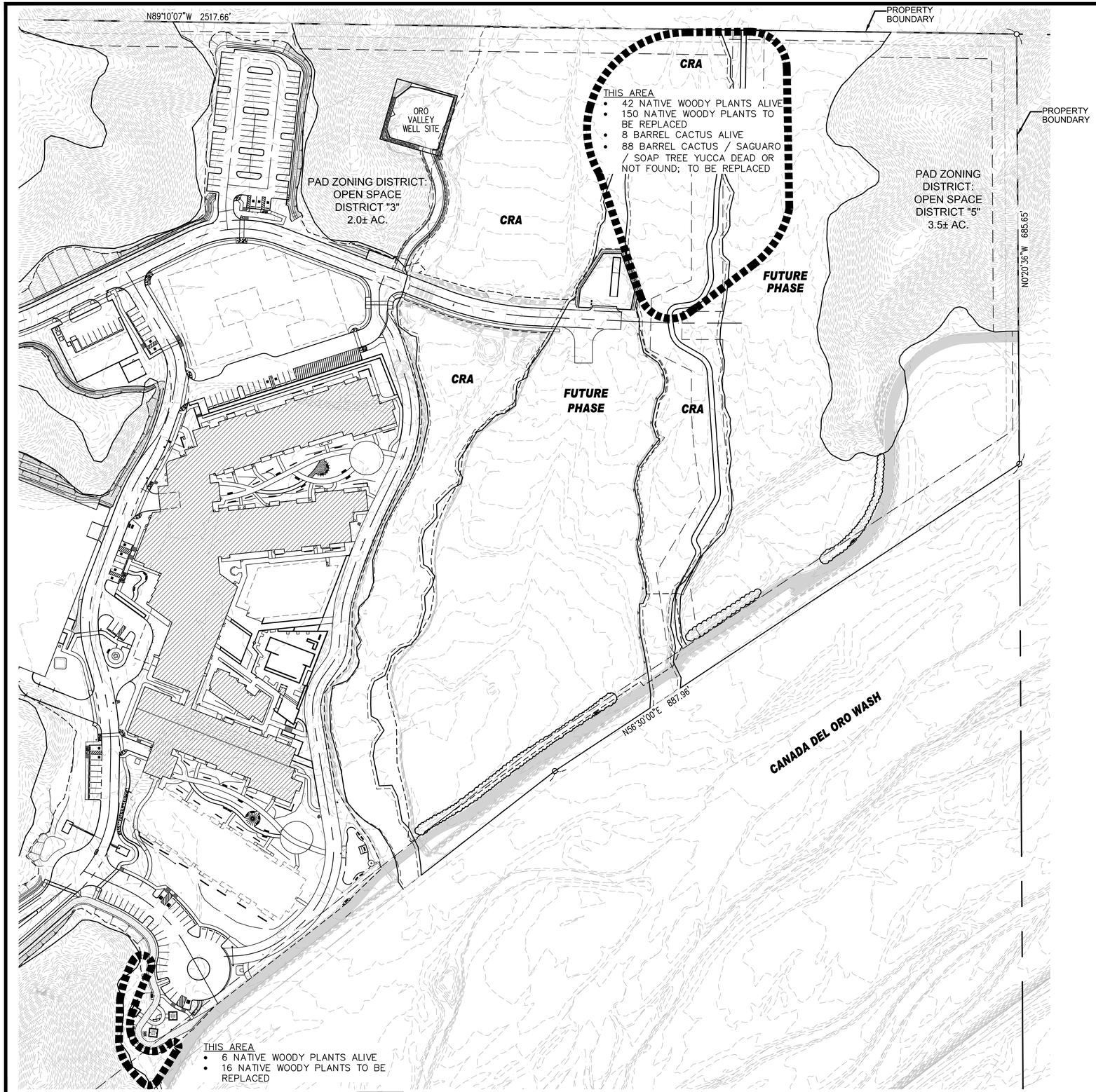

NOTES

1. SITE VISIT TO DETERMINE HEALTH OF EXISTING TRANSPLANTED NATIVE PLANTS WAS CONDUCTED IN DECEMBER 2021.
2. AT TIME OF CONSTRUCTION ADDITIONAL PLANTS MAY BE FOUND DEAD. PRIOR TO REPLACEMENT CONTRACTOR SHALL INVENTORY AND TAG PLANTS FOR TOWN INSPECTION. ADDITIONAL DEAD PLANTS SHALL BE REPLACED.
3. TAGGING SHALL BE:

3.1. WHITE = PLANT IS ALIVE
3.2. RED = PLANT IS DEAD

4. EXISTING IRRIGATION SYSTEM SHALL BE USED. IT SHALL BE REPAIRED AS NECESSARY.
5. REPLACEMENT PLANTS MUST BE PLANTED IN CRA AREA IN THE NORTHERN SECTION.
6. COORDINATE PLACEMENT OF REPLACEMENT PLANTS WITH NEW IMPROVEMENTS IN SOUTHERN SECTION.

REPLACEMENT

85 BARREL CACTUS – 12" DIAMETER

2 SAGUARO – 3' TALL

1 SOAP TREE YUCCA – 2' TALL

166 WOODY PLANTS

	QTY	SIZE
ACACIA CONSTRICTA	43	24" BOX
ACACIA GREGGII	25	24" BOX
CELTIS PALLIDA	37	5 GAL
CERCIDIUM FLORIDUM	7	24" BOX
CERCIDIUM MICROPHYLLUM	12	24" BOX
PROSOPIS VELUTINA	26	24" BOX
ZIZYPHUS OBTUSIFOLIA	15	5 GAL

The WLB Group INC.
WLB
Engineering Planning Surveying
Landscape Architecture Urban Design
Offices located in Tucson, Phoenix, Flagstaff, Arizona, and Las Vegas, Nevada
4444 East Broadway
Tucson, Arizona (520) 881-7480

0' 80' 160' 240'

Q:\181057\GE-01\02 Landscape\08 FLP\181057 la posada flp 43-L3.0.dwg

TRANSPLANT PLAN

Call at least two full working days before you begin excavation.
ARIZONA 811
Arizona Blue Stake, Inc.
Dial 8-1-1 or 1-800-STAKE-IT (782-5348)
In Maricopa County: (602) 263-1100

REGISTERED LANDSCAPE ARCHITECT
CERTIFICATE NO.
25621
GARY L. GRIZZLE
Date Signed 3/30/22
ARIZONA, U.S.A.

FINAL LANDSCAPE PLAN
LA POSADA AT PUSCH RIDGE
PHASE 1
(REVISION TO FINAL LANDSCAPE PLAN FOR NAKOMA SKY)
PHASES 1, 2, 3 AND FUTURE PHASES

ROONEY RANCH AREA Z RECORDED IN BOOK 62 M&P, PAGE 4, LOTS 1–68 AND COMMON AREAS "A", "B", AND "C" BEING A PORTION OF SECTION 7, TOWNSHIP 12 SOUTH, RANGE 14 EAST, G & S.R.M. TOWN OF ORO VALLEY, PIMA COUNTY, ARIZONA

MARCH 2022
WLB NO. 181057–G–E02
CONTOUR INTERVAL: 1' SCALE: 1"=80'

L3.0

REFERENCE CASE #'S:
0V1601351
0V115–027
0V914–008
0V914–007A
0V903–03A
(O)15–14

EMITTER SCHEDULE

SYMBOL	PLANT NAME	#MULTI-PORTS	#OUTLETS	GPH/OUTLET	TOTAL
	CELTIS RETICULATA NETLEAF HACKBERRY	2	9	2	18
CF	CERCIDIUM FLORIDUM BLUE PALO VERDE	2	12	2	24
CM	CERCIDIUM MICROPHYLLUM FOOTHILL PALO VERDE	2	12	2	24
	CERCIDIUM PRAECOX PALO BREA	1	6	2	12
	CERCIDIUM X 'DESERT MUSEUM' DESERT MUSEUM PALO VERDE	1	6	2	12
	CERCIS MEXICANA MEXICAN REDBUD	1	6	2	12
	CHILOPSIS LINEARIS 'WARREN JONES' DESERT WILLOW	1	6	2	12
	OLEA EUROPAEA 'SWAN HILL' SWAN HILL OLIVE	2	9	2	18
	OLNEYA TESOTA IRONWOOD	1	6	2	12
	PISTACIA CHINENSIS 'RED PUSH' RED PUSH CHINESE PISTACHE	1	6	2	12
	PITHECELLOBIUM FLEXICAULE TEXAS EBONY	1	6	2	12
	PROSOPIS GLANDULOSA 'MAVERICK' THORNLESS HONEY MESQUITE	1	6	2	12
	PROSOPIS HYBRID PHOENIX THORNLESS HYBRID MESQUITE	1	6	2	12
	PROSOPIS VELUTINA VELVET MESQUITE	1	6	2	12
PV	PROSOPIS VELUTINA VELVET MESQUITE	2	12	2	24
	QUERCUS VIRGINIANA 'HERITAGE' HERITAGE SOUTHERN LIVE OAK	1	6	2	12
AG	ACACIA CONSTRICTA WHITETHORN ACACIA	2	9	2	18
AG	ACACIA GREGGII CATCLAW ACACIA	2	9	2	18
	CELTIS PALLIDA DESERT HACKBERRY	2	6	2	12

SHRUBS	PLANT NAME	#OUTLETS	GPH/OUTLET	TOTAL
	ALOYSIA GRATISSIMA FRAGRANT BEE BUSH	2	1	2
	CALLIANDRA ERIOPHYLLA PINK FAIRY DUSTER	1	1	1
	CALLIANDRA X 'SIERRA STARR' RED FAIRY DUSTER 'SIERRA STARR'	2	1	2
	CALLISTEMON CITRINUS LEMON BOTTLEBRUSH SHRUB	3	1	3
EF	CORDIA PARVIFOLIA LITTLE LEAF CORDIA	2	1	2
	DALEA GREGGII TRAILING INDIGO BUSH	2	1	2
	DODONAEA VISCOSA GREEN HOPSEED BUSH	2	1	2
	ENGELIA FARINOSA BRITTLE BUSH	1	1	1
	ERIOGONUM WRIGHTII BUCKWHEAT	1	1	1
	EREMOPHILA MACULATA 'VALENTINE' VALENTINE EMU BUSH	2	1	2
	ERIGAMERIA LARIGIFOLIA TURPENTINE BUSH	1	1	1
	HYPTIS EMORYI DESERT LAVENDER	2	1	2
	JUSTICIA CALIFORNICA CHUPAROSA	2	1	2
	JUSTICIA SPICIGERA MEXICAN HONEYSUCKLE	2	1	2
	LANTANA CAMARA 'NEW GOLD' NEW GOLD LANTANA	1	1	1

SYMBOL	PLANT NAME	OUTLETS	GPH/OUTLET	TOTAL
	LANTANA MONTEVIDENSIS TRAILING LANTANA	1	1	1
	LEUCOPHYLLUM FRUTESCENS HEAVENLY CLOUD RANGER	2	1	2
	LEUCOPHYLLUM FRUTESCENS GREEN CLOUD TEXAS RANGER	2	1	2
	LEUCOPHYLLUM PRUINOSUM FRAGRANT CLOUD	2	1	2
	MUHLENBERGIA LINDHEIMERI AUTUMN GLOW DEER GRASS	2	1	2
	MUHLENBERGIA RIGENS DEER GRASS	2	1	2
	NANDINA DOMESTICA HEAVENLY BAMBOO	2	1	2
	PSILOSTROPHE COOPERI PAPERFLOWER	1	1	1
	PUNICA GRANATUM CALIFORNIA SUNSET POMEGRANATE	3	1	3
	RHUS VIRENS EVERGREEN SUMAC	3	1	3
	SALVIA CLEVELANDII CLEVELAND SAGE	2	1	2
	SIMMONDSIA CHINENSIS JOJOBA	2	1	2
	SOPHORA SECUNDIFLORA TEXAS MOUNTAIN LAUREL	3	1	3
	TECOMA X 'SUNRISE' YELLOW BELLS	3	1	3
	TACOMA CAPENSIS CAPE HONEYSUCKLE	3	1	3
	VIGUIERA DELTOIDEA GOLDENEYE	1	1	1
	ZINNIA ACEROSA DESERT ZINNIA	1	1	1

ACCENTS	BOTANICAL NAME	#OUTLETS	GPH/OUTLET	TOTAL
	AGAVE VICTORIAE-REGINAE QUEEN VICTORIA AGAVE	1	.6	.6
	AGAVE PARYYI TUNGATA ARTICHOKE AGAVE	1	.6	.6
	ALOE BARBADENSIS BARBADOS ALOE	1	.6	.6
	ALOE HYBRID 'BLUE ELF' BLUE ELF ALOE	1	.6	.6
	ASCLEPIAS LINAERIS 'MONARCH PINELEAF MILKWEED MAGNET'	1	.6	.6
	ASCLEPIAS SUBULATA RUSH MILKWEED	1	.6	.6
	CAESALPINIA PULCHERRIMA REDBURD OF PARADISE	2	1	2
	CARNEGIEA GIGANTEA SAGUARO	1	.6	.6
	DASYLIRION LONGISSIMUM TOOTHLESS DESERT SPOON	1	1	1
	DASYLIRION WHEELERI DESERT SPOON	1	1	1
	ECHINOCACTUS GRUNSONII GOLDEN BARREL	1	.6	.6
	EUPHORBIA ANTISYPHILITICA CANDELILLA EUPHORBIA	1	1	1
	EUPHORBIA RESINIFERA RESIN SPURGE	1	.6	.6
	EUPHORBIA RIGIDA GOPHER PLANT	1	1	1
	FEROCACTUS WISLIZENII FISH HOOK BARREL CACTUS	1	.6	.6
	FOUQUIERIA SPLENDENS OCOTILLO	1	.6	.6
	HESPERALOE FUNIFERA GIANT HEPERALOE	1	1	1
	HESPERALOE PARVIFLORA RED YUCCA	1	1	1
	HESPERALOE PARVIFLORA BRAKELIGHTS RED YUCCA	1	1	1

SYMBOL	PLANT NAME	OUTLETS	GPH/OUTLET	TOTAL
	JUSTICIA CANDICANS RED JUSTICIA	1	1	1
	LEUCOPHYLLUM ZYGOPHYLLUM BLUE RNAGER	2	1	2
	MUHLENBERGIA LINDHEIMERI AUTUMN GLOW DEER GRASS	2	1	2
	NOLINA MICROCARPA BEAR GRASS	1	1	1
	OPUNTIA ENGELMANII ENGELMANN'S PRICKLY PEAR	1	.6	.6
	OPUNTIA VERSICOLOR BUCKHORN CHOLLA	1	.6	.6
	PEDILANTHUS MACROCARPUS LADY SLIPPER	1	1	1
	RUELLIA PENNINSULARIS DESERT RUELLIA	1	1	1
	YUCCA ELATA PALE LEAF YUCCA	1	.6	.6
	YUCCA PALLIDA PALE LEAF YUCCA	1	.6	.6
	YUCCA RIGIDA MEXICAN BLUE YUCCA	1	.6	.6

IRRIGATION LEGEND

- MAINLINE PIPING - SCH. 40 PVC
- SPRINKLER LATERAL PIPING- SCH 40 PVC - size as noted on plans
- T — T TREE EMITTER LATERAL LINE - SCH 40 PVC 1", SEE SPECS
- S — S SHRUB EMITTER LATERAL LINE - SCH 40 PVC 3/4", SEE SPECS
- S — S CONTAINER PLANTING LATERAL - SEE PLAN SHEETS
- S — S END OF LINE FLUSH - as detailed
- M NEW 2" WATER METER, SEE CIVIL
- BF FEBCO 825YA - 2", REDUCED PRESSURE BACKFLOW PREVENTER IN ENCLOSURE
- A NEW CONTROLLER - RAINMASTER EAGLE PLUS SA6-RM2-TW, 2-WIRE, SEE SPECS.
- SLEEVE SCH. 40 PVC (NOT ALL REQ'D SLEEVES ARE SHOWN)
- GATE VALVE- (LINE SIZE) SEE SPECS
- RAIN BIRD 33-DLRC - 3/4" BRASS QUICK-COUPLING VALVE
- REMOTE CONTROL VALVE (DRIP) HUNTER ICZ-101-40 psi INCLUDES FILTER AND PRESSURE REGULATOR NOTE: FOR ANNIAL VALVE A-31 ONLY USE HUNTER PCZ-101-25 psi NOTE: FOR ALL OTHER POT VALVES USE HUNTER ICZ-101-25 psi
- REMOTE CONTROL VALVE HUNTER ICV-1"
- CONTROL VALVE (POTS) AGRIFIM NDS A6TBGT BATTERY OP HOSE TIMER
- MASTER VALVE - GRISWOLD 216OE-2"-NORMALLY OPEN
- FS FLOW SENSOR - RAINMASTER FSB200 - 2"
- G GROUNDING LOCATION FOR 2-WIRE & CONTROLLER
- Valve Callout
  - Valve Number
  - # Valve Flow, or for Drip (TREE, SHRUB OR POTS)
  - # Valve Size

HEAD LEGEND

SYMBOL	MANUFACTURER/MODEL/DESCRIPTION	QTY	PSI
M L O	Hunter MP1000 PROS-04-PRS40-CV Turf Rotator, 4" (10.16 cm) pop-up with check valve, pressure regulated to 40 psi (2.76 bar), MP Rotator nozzle on PRS40 body. M=Maroon adj arc 90 to 210, L=Light Blue 210 to 270 arc, O=Olive 360 arc.	6	40
K G R	Hunter MP2000 PROS-04-PRS40-CV Turf Rotator, 4" (10.16 cm) pop-up with factory installed check valve, pressure regulated to 40 psi (2.76 bar), MP Rotator nozzle on PRS40 body. K=Black adj arc 90-210, G=Green adj arc 210-270, R=Red 360 arc.	13	40

IRRIGATION NOTES

1. LOCATE ALL VALVE BOXES ADJACENT TO WALKS OR CURBING OR IN D.G. AREAS. LOCATE OUTSIDE OF TURF WHERE POSSIBLE. ARRANGE NEATLY WITH 6" BETWEEN BOXES. LOCATIONS TO BE PRE-APPROVED BY OWNER'S REPRESENTATIVE.
2. EACH REMOTE CONTROL VALVE SHALL HAVE ITS OWN SUPPLY PIPING FROM MAINLINE. SIZE SHALL BE SAME AS VALVE SIZE.
3. SYSTEM TO BE CAPABLE OF OPERATING 6 TREE OR 6 SHRUB OR 8 POT VALVES SIMULTANEOUSLY.
4. IF DESERT LANDSCAPING IS USED WHICH WILL ULTIMATELY RELY ON NATURAL WATER SOURCES, A TEMPORARY DRIP IRRIGATION SYSTEM SHALL BE EMPLOYED UNTIL SUCH TIME AS THE PLANT MATERIALS ARE SUSTAINED BY NATURAL WATER SOURCES.
5. THE PROPERTY OWNER IS RESPONSIBLE FOR MAINTAINING THE TEMPORARY SYSTEM AS LONG AS NECESSARY IN ORDER TO TRANSITION PLANT OVER TO NATURAL SOURCES. ANY PLANT MATERIALS THAT DIE IN TRANSITION, FOR ANY REASON, SHALL BE REPLACED IN ACCORDANCE WITH SEC. 27.6.E.4, MAINTENANCE.
6. IRRIGATION SYSTEMS CONNECTED TO POTABLE WATER MAINS (PUBLIC OR PRIVATE) SHALL BE EQUIPPED WITH BACKFLOW PREVENTERS.
7. THE ANNUAL WATER USE FOR A PROJECT SHALL NOT EXCEED THE ANNUAL LANDSCAPE WATER PLAN.
8. IRRIGATION METER READINGS SHALL BE USED TO DETERMINE COMPLIANCE WITH THE LANDSCAPE WATER PLAN. NON-COMPLIANCE IS SUBJECT TO PENALTIES UNDER ORO VALLEY TOWN CODE.
9. METER READINGS SHALL BE TAKEN, AT A MINIMUM, ON AN ANNUAL BASIS. MONTHLY READINGS MAY BE REQUIRED, AT THE DISCRETION OF THE PLANNING AND ZONING ADMINISTRATOR, IN ORDER TO ADDRESS NON-COMLIANCE WITH THE WATER PLAN.
10. AN INITIAL METER READING SHALL BE TAKEN PRIOR TO THE ISSUANCE OF THE CERTIFICATE OF OCCUPANCY AND RECORDED FOR REFERENCE AS PART OF THE WATER PLAN.
11. IRRIGATION WATER SHALL NOT LEAVE THE LANDSCAPED AREAS AND FLOW ONTO ROADS, PARKING AREAS OR SIDEWALKS.
12. SPRINKLER HEADS SHALL BE INSTALLED AT LEAST EIGHT (8) INCHES AWAY FROM IMPERMEABLE SURFACES.
13. IRRIGATION AND/OR WATERING PLANS SHALL MEET THE MINIMUM STANDARDS OF THE AMERICAN SOCIETY OF IRRIGATION CONSULTANTS.
14. ALL CONTROL WIRE TO HAVE A DEDICATED 2" SLEEVE UNDER ALL PAVING, WALKS AND PLANTER WALLS.
15. MAINTAIN 10' SEPARATION BETWEEN IRRIGATION MAINLINE AND BUILDINGS.

The WLB Group INC. **WLB**
Engineering Planning Surveying
Landscape Architecture Urban Design
Offices located in Tucson, Phoenix, Flagstaff, Arizona, and Las Vegas, Nevada
4444 East Broadway
Tucson, Arizona (520) 881-7480

C:\Users\Public\Docu□ents\BU 12.12.10\WLB La Posada\181057 la posada flp I1.0 Legend.dwg

IRRIGATION LEGENDS

ASIC PROFESSIONAL MEMBER

Irrigation Consultant:
Carl Kominsky L.A., Inc.
5609 N. Camino Del Sol Tucson, AZ 85718 (520)740-0700

AMERICAN SOCIETY OF IRRIGATION CONSULTANTS 10925 CARL S. KOMINSKY ARIZONA, U.S.A. EXPIRES 6/30/2014

FINAL LANDSCAPE PLAN
LA POSADA AT PUSCH RIDGE
PHASE 1
(REVISION TO FINAL LANDSCAPE PLAN FOR NAKOMA SKY)
PHASES 1, 2, 3 AND FUTURE PHASES

ROONEY RANCH AREA Z RECORDED IN BOOK 62 M&P, PAGE 4, LOTS 1–68 AND COMMON AREAS "A", "B", AND "C" BEING A PORTION OF SECTION 7, TOWNSHIP 12 SOUTH, RANGE 14 EAST, G & S.R.M. TOWN OF ORO VALLEY, PIMA COUNTY, ARIZONA

DECEMBER 2021
WLB NO. 181057–G–E02
CONTOUR INTERVAL: 1'

□1.□

REFERENCE CASE #'S:
0V1601351
0V115–027
0V914–008
0V914–007A
0V903–03A
(O)15–14

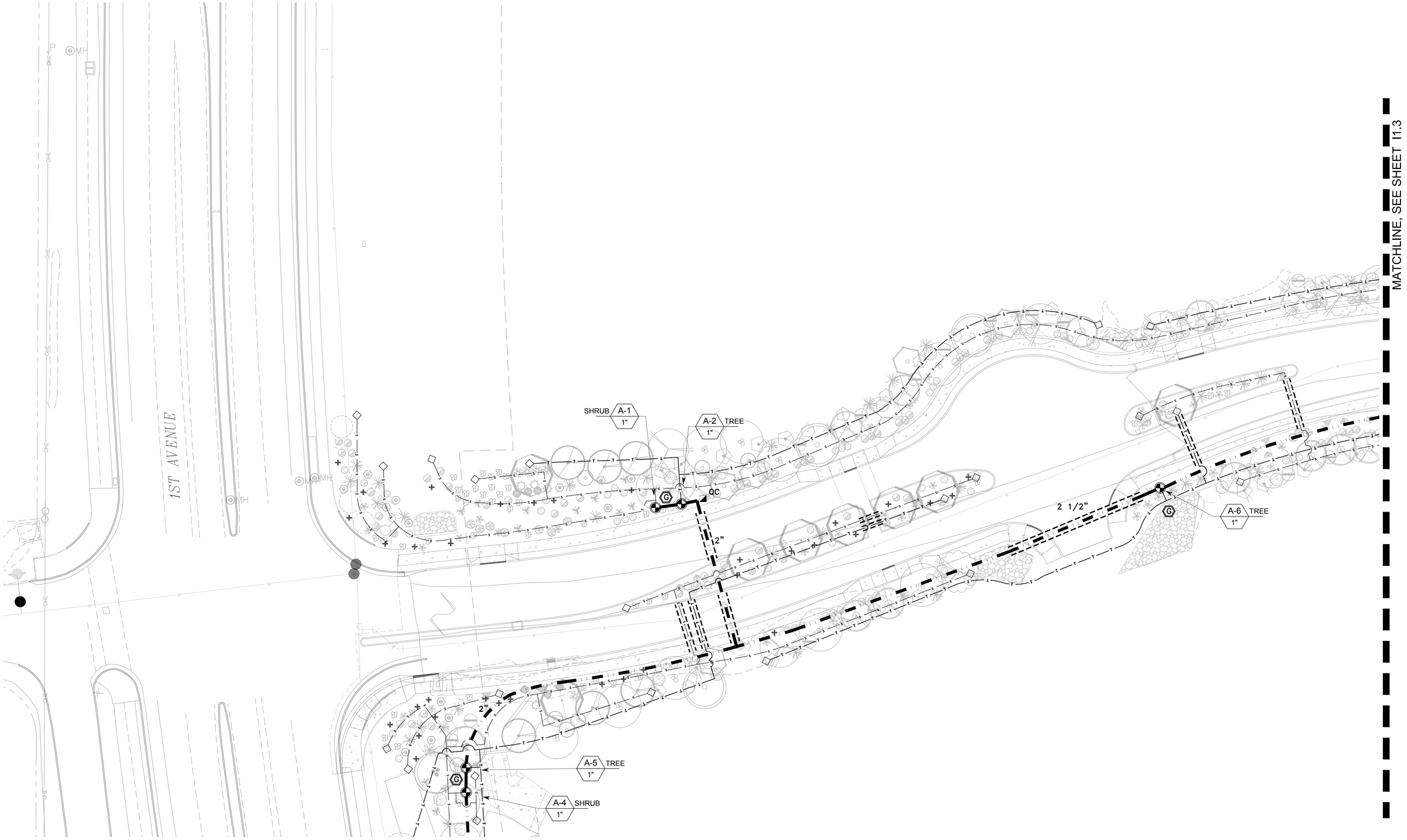

The WLB Group INC. **WLB**

Engineering Planning Surveying
Landscape Architecture Urban Design
Offices located in Tucson, Phoenix, Flagstaff, Arizona, and Las Vegas, Nevada
4444 East Broadway
Tucson, Arizona (520) 881-7480

0' 20' 40' 60'

C:\Users\Public\Docu□ents\BU 12.12.10\WLB La Posada\181057 la posada flp 55-I1.1.dwg

IRRIGATION PLAN

ASIC PROFESSIONAL MEMBER

Irrigation Consultant:
Carl Kominsky L.A., Inc.
5609 N. Camino Del Sol Tucson, AZ 85718 (520)740-0700

Call at least two full working days before you begin excavation.
ARIZONA 811
Arizona Blue Stake, Inc.
Dial 8-1-1 or 1-800-STAKE-IT (782-5348)
In Maricopa County: (602) 263-1100

ARIZONA REGISTERED LANDSCAPE ARCHITECT
CARL S. KOMINSKY
10925
12/13/21
EXPIRES 6/30/2024

FINAL LANDSCAPE PLAN
LA POSADA AT PUSCH RIDGE
PHASE 1
(REVISION TO FINAL LANDSCAPE PLAN FOR NAKOMA SKY)
PHASES 1, 2, 3 AND FUTURE PHASES

ROONEY RANCH AREA Z RECORDED IN BOOK 62 M&P, PAGE 4, LOTS 1–68 AND COMMON AREAS "A", "B", AND "C" BEING A PORTION OF SECTION 7, TOWNSHIP 12 SOUTH, RANGE 14 EAST, G & S.R.M. TOWN OF ORO VALLEY, PIMA COUNTY, ARIZONA

DECEMBER 2021
WLB NO. 181057–G–E02
CONTOUR INTERVAL: 1' SCALE: 1"=20'

1.1

REFERENCE CASE #'S:
OV1601351
OV115–027
OV914–008
OV914–007A
OV903–03A
(O)15–14

The WLB Group INC.

WLB

Engineering Planning Surveying
Landscape Architecture Urban Design
Offices located in Tucson, Phoenix, Flagstaff, Arizona, and Las Vegas, Nevada
4444 East Broadway
Tucson, Arizona (520) 881-7480

0' 20' 40' 60'

C:\Users\Public\Docu□ents\BU 12.12.10\WLB La Posada\181057 la posada flp 56-I1.2.dwg

IRRIGATION PLAN

ASIC PROFESSIONAL MEMBER

Irrigation Consultant:
Carl Kominsky L.A., Inc.
5609 N. Camino Del Sol Tucson, AZ 85718 (520)740-0700

Call at least two full working days before you begin excavation
ARIZONA 811
Arizona Blue Stake, Inc.
Dial 8-1-1 or 1-800-STAKE-IT (782-5348)
In Maricopa County: (602) 263-1100

REGISTERED LANDSCAPE ARCHITECT
CERTIFICATE NO. 10925
CARL S. KOMINSKY
DATE SIGNED 12/12/21
ARIZONA, U.S.A.
EXPIRES 6/30/2024

FINAL LANDSCAPE PLAN
LA POSADA AT PUSCH RIDGE
PHASE 1
(REVISION TO FINAL LANDSCAPE PLAN FOR NAKOMA SKY)
PHASES 1, 2, 3 AND FUTURE PHASES

ROONEY RANCH AREA Z RECORDED IN BOOK 62 M&P, PAGE 4, LOTS 1–68 AND COMMON AREAS "A", "B", AND "C" BEING A PORTION OF SECTION 7, TOWNSHIP 12 SOUTH, RANGE 14 EAST, G & S.R.M. TOWN OF ORO VALLEY, PIMA COUNTY, ARIZONA

DECEMBER 2021
WLB NO. 181057–G–E02
CONTOUR INTERVAL: 1' SCALE: 1"=20'

□**1.**□

REFERENCE CASE #'S:
OV1601351
OV115–027
OV914–008
OV914–007A
OV903–03A
(O)15–14

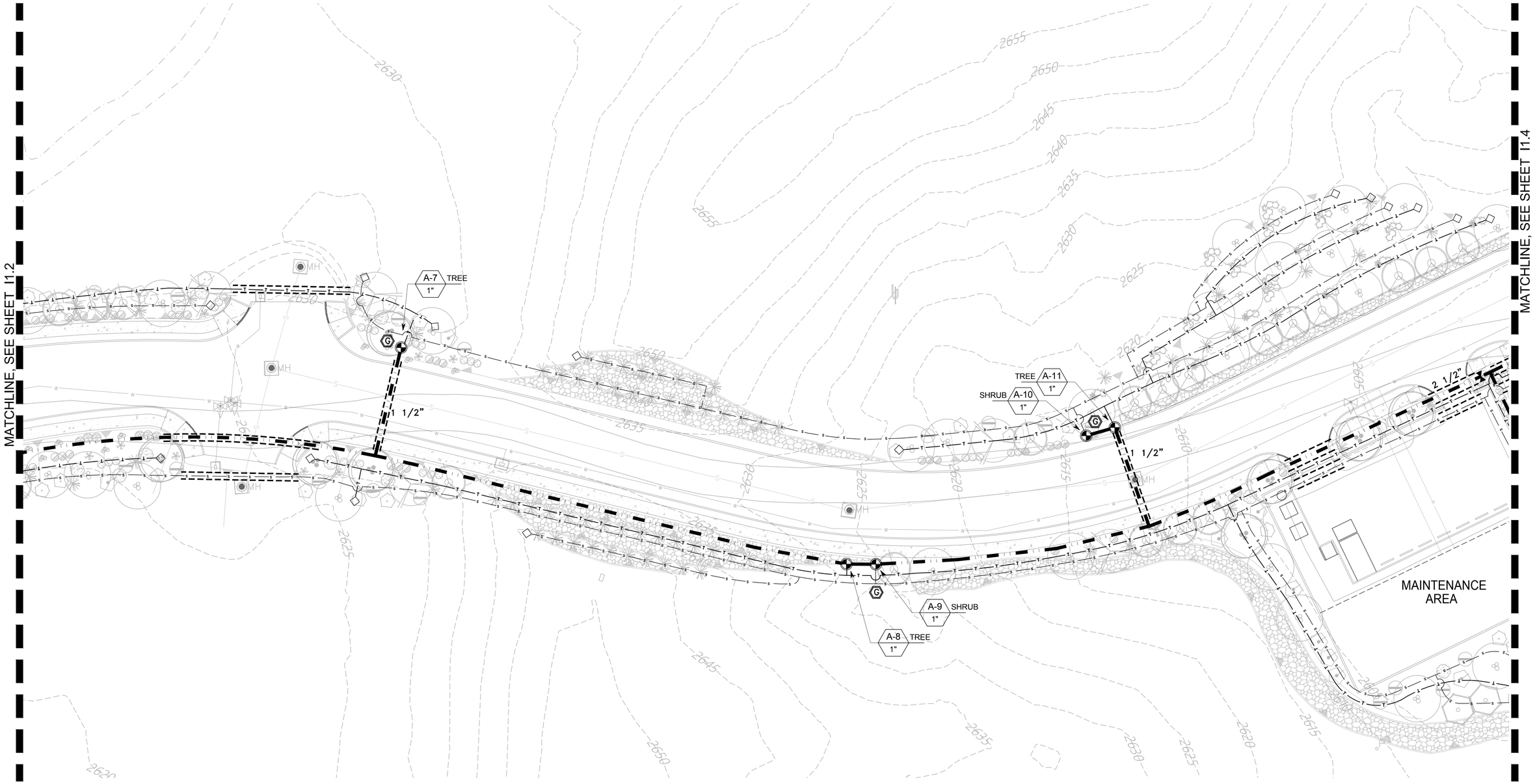

The WLB Group INC.

WLB

Engineering Planning Surveying
Landscape Architecture Urban Design
Offices located in Tucson, Phoenix, Flagstaff, Arizona, and Las Vegas, Nevada
4444 East Broadway
Tucson, Arizona (520) 881-7480

0' 20' 40' 60'

C:\Users\Public\Docu□ents\BU 12.12.10\WLB La Posada\181057 la posada flp 57-I1.3.dwg

IRRIGATION PLAN

ASIC PROFESSIONAL MEMBER

Irrigation Consultant:
Carl Kominsky L.A., Inc.
5609 N. Camino Del Sol Tucson, AZ 85718 (520)740-0700

Call at least two full working days before you begin excavation.
ARIZONA 811
Blue Stake, Inc.
Dial 8-1-1 or 1-800-STAKE-IT (782-5348)
In Maricopa County: (602) 263-1100

REGISTERED LANDSCAPE ARCHITECT
CERTIFICATE NO. 10925
CARL S. KOMINSKY
DATE SIGNED 12/13/21
ARIZONA, U.S.A.
EXPIRES 6/30/2024

FINAL LANDSCAPE PLAN
LA POSADA AT PUSCH RIDGE
PHASE 1
(REVISION TO FINAL LANDSCAPE PLAN FOR NAKOMA SKY)
PHASES 1, 2, 3 AND FUTURE PHASES

ROONEY RANCH AREA Z RECORDED IN BOOK 62 M&P, PAGE 4, LOTS 1–68 AND COMMON AREAS "A", "B", AND "C" BEING A PORTION OF SECTION 7, TOWNSHIP 12 SOUTH, RANGE 14 EAST, G & S.R.M. TOWN OF ORO VALLEY, PIMA COUNTY, ARIZONA

DECEMBER 2021
WLB NO. 181057–G–E02
CONTOUR INTERVAL: 1' SCALE: 1"=20'

□1.□

REFERENCE CASE #'S:
OV1601351
OV115–027
OV914–008
OV914–007A
OV903–03A
(O)15–14

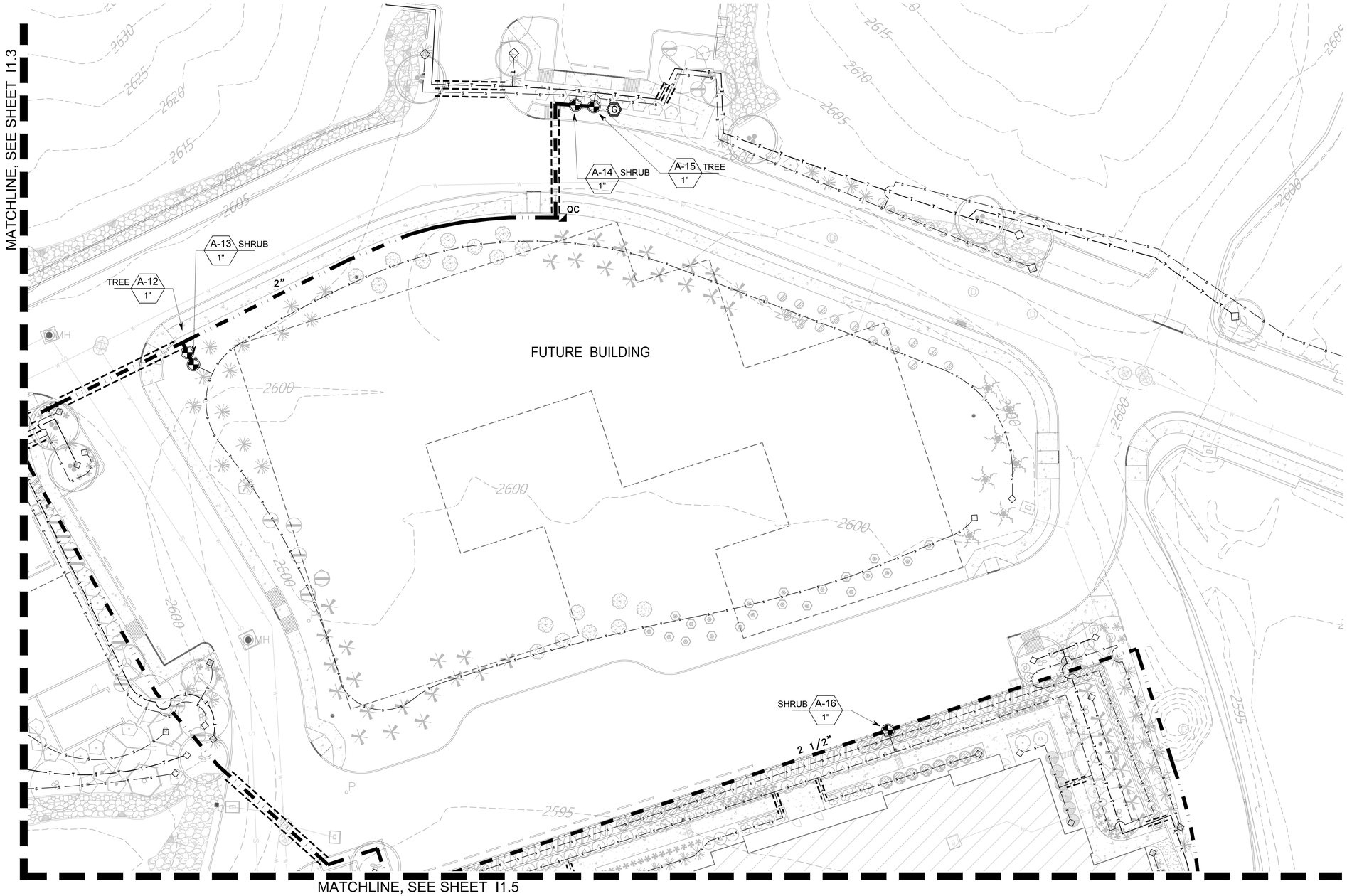

NOTE:
MAINTAIN 10' SEPARATION BETWEEN
IRRIGATION MAINLINE AND BUILDINGS.

FINAL LANDSCAPE PLAN
LA POSADA AT PUSCH RIDGE
PHASE 1
(REVISION TO FINAL LANDSCAPE PLAN FOR NAKOMA SKY)
PHASES 1, 2, 3 AND FUTURE PHASES

ROONEY RANCH AREA Z RECORDED IN BOOK 62 M&P, PAGE 4, LOTS 1–68 AND COMMON AREAS "A", "B", AND "C" BEING A PORTION OF SECTION 7, TOWNSHIP 12 SOUTH, RANGE 14 EAST, G & S.R.M. TOWN OF ORO VALLEY, PIMA COUNTY, ARIZONA

DECEMBER 2021
WLB NO. 181057–G–E02
CONTOUR INTERVAL: 1' SCALE: 1"=20'

1.4

REFERENCE CASE #'S:
0V1601351
0V115–027
0V914–008
0V914–007A
0V903–03A
(O)15–14

Irrigation Consultant:
Carl Kominsky L.A., Inc.
5609 N. Camino Del Sol Tucson, AZ 85718 (520)740–0700

Call at least two full working days before you begin excavation
ARIZONA 811
Arizona Blue Stake, Inc.
Dial 8-1-1 or 1-800-STAKE-IT (782-5348)
In Maricopa County: (602) 263-1100

ASIC PROFESSIONAL MEMBER

CARL S. KOMINSKY 10925 REGISTERED LANDSCAPE ARCHITECT ARIZONA, U.S.A. EXPIRES 6/30/2024

The WLB Group INC.
WLB
Engineering Planning Surveying
Landscape Architecture Urban Design
Offices located in Tucson, Phoenix, Flagstaff, Arizona, and Las Vegas, Nevada
4444 East Broadway
Tucson, Arizona (520) 881-7480

0' 20' 40' 60'

C:\Users\Public\Docu ents\BU 12.12.10\WLB La Posada\181057 la posada flp 58-I1.4.dwg

IRRIGATION PLAN

MATCHLINE, SEE SHEET I1.4

NOTE:
LOCATE ALL EQUIPMENT IN PLANTER AREA. LOCATION TO BE APPROVED IN FIELD.

2" FLOW SENSOR
2" MASTER VALVE
2" PR BACKFLOW PREVENTER
2" WATER METER (85 psi), SEE CIVIL

BUILDING B

BUILDING A

BUILDING C

PARKING GARAGE

SHRUB A-33 1"

TREE A-32 1"

A-17 SHRUB 1"

A-18 TREE 1"

A-19 SHRUB 1"

CONTROLLER 'A' ELEC. CONNECTION BY OTHERS.

PROVIDE 1½" DEDICATED CONDUIT BETWEEN CONTROLLER AND MAINLINE PATH FOR 2-WIRE

2 1/2"

1 1/2"

FUTURE BUILDING

POOL

NOTE:
MAINTAIN 10' SEPARATION BETWEEN IRRIGATION MAINLINE AND BUILDINGS.

MATCHLINE, SEE SHEET I1.6

0' 20' 40' 60'

C:\Users\Public\Docu ents\BU 12.12.10\WLB La Posada\181057 la posada flp 59-I1.5.dwg

The WLB Group INC.

WLB

Engineering Planning Surveying
Landscape Architecture Urban Design
Offices located in Tucson, Phoenix, Flagstaff, Arizona, and Las Vegas, Nevada
4444 East Broadway
Tucson, Arizona (520) 881-7480

IRRIGATION PLAN

ASIC PROFESSIONAL MEMBER

Irrigation Consultant:
Carl Kominsky L.A., Inc.
5609 N. Camino Del Sol Tucson, AZ 85718 (520)740-0700

Call at least two full working days before you begin excavation.
ARIZONA 811
Arizona Blue Stake, Inc.
Dial 8-1-1 or 1-800-STAKE-IT (782-5348)
In Maricopa County: (602) 263-1100

REGISTERED LANDSCAPE ARCHITECT
10925
CARL S. KOMINSKY
ARIZONA, U.S.A.
12/13/21
EXPIRES 6/30/2024

FINAL LANDSCAPE PLAN
LA POSADA AT PUSCH RIDGE
PHASE 1
(REVISION TO FINAL LANDSCAPE PLAN FOR NAKOMA SKY)
PHASES 1, 2, 3 AND FUTURE PHASES

ROONEY RANCH AREA Z RECORDED IN BOOK 62 M&P, PAGE 4, LOTS 1–68 AND COMMON AREAS "A", "B", AND "C" BEING A PORTION OF SECTION 7, TOWNSHIP 12 SOUTH, RANGE 14 EAST, G & S.R.M. TOWN OF ORO VALLEY, PIMA COUNTY, ARIZONA

DECEMBER 2021
WLB NO. 181057-G-E02
CONTOUR INTERVAL: 1' SCALE: 1"=20'

REFERENCE CASE #'S:
0V1601351
0V115-027
0V914-008
0V914-007A
0V903-03A
(O)15-14

MATCHLINE, SEE SHEET I1.5

BUILDING A

POOL

BUILDING D

OPEN SPACE

CONTINUE DRIP LINE TO 5 TREES NOT SHOWN.

A-20 SHRUB 1"

A-21 TREE 1"

NOTE:
MAINTAIN 10' SEPARATION BETWEEN IRRIGATION MAINLINE AND BUILDINGS.

A-31 SHRUB 1"

A-30 TREE 1"

A-22 TREE 1"

A-23 SHRUB 1"

A-24 11.1 1"

2" HDPE MAINLINE INSIDE 6" HDPE SLEEVE, SEE CIVIL FOR SLEEVE DETAIL

SHRUB A-29 1"

TREE A-28 1"

2 1/2"

2"

MATCHLINE, SEE SHEET I1.7

MATCHLINE, SEE SHEET I1.9

FINAL LANDSCAPE PLAN
LA POSADA AT PUSCH RIDGE
PHASE 1
(REVISION TO FINAL LANDSCAPE PLAN FOR NAKOMA SKY)
PHASES 1, 2, 3 AND FUTURE PHASES

ROONEY RANCH AREA Z RECORDED IN BOOK 62 M&P, PAGE 4, LOTS 1–68 AND COMMON AREAS "A", "B", AND "C" BEING A PORTION OF SECTION 7, TOWNSHIP 12 SOUTH, RANGE 14 EAST, G & S.R.M. TOWN OF ORO VALLEY, PIMA COUNTY, ARIZONA

DECEMBER 2021
WLB NO. 181057–G–E02
CONTOUR INTERVAL: 1' SCALE: 1"=20'

REFERENCE CASE #'S:
0V1601351
0V115–027
0V914–008
0V914–007A
0V903–03A
(0)15–14

1.

Irrigation Consultant:
Carl Kominsky L.A., Inc.
5609 N. Camino Del Sol Tucson, AZ 85718 (520)740–0700

Call at least two full working days before you begin excavation.
ARIZONA 811
Arizona Blue Stake, Inc.
Dial 8-1-1 or 1-800-STAKE-IT (782-5348)
In Maricopa County: (602) 263-1100

REGISTERED LANDSCAPE ARCHITECT
10925
CARL S. KOMINSKY
ARIZONA, U.S.A.
EXPIRES 6/30/2024

ASIC
PROFESSIONAL MEMBER

The WLB Group INC.
WLB
Engineering Planning Surveying
Landscape Architecture Urban Design
Offices located in Tucson, Phoenix, Flagstaff, Arizona, and Las Vegas, Nevada
4444 East Broadway
Tucson, Arizona (520) 881-7480

0' 20' 40' 60'

C:\Users\Public\Docu ents\BU 12.12.10\WLB La Posada\181057 la posada flp 60-I1.6.dwg

IRRIGATION PLAN

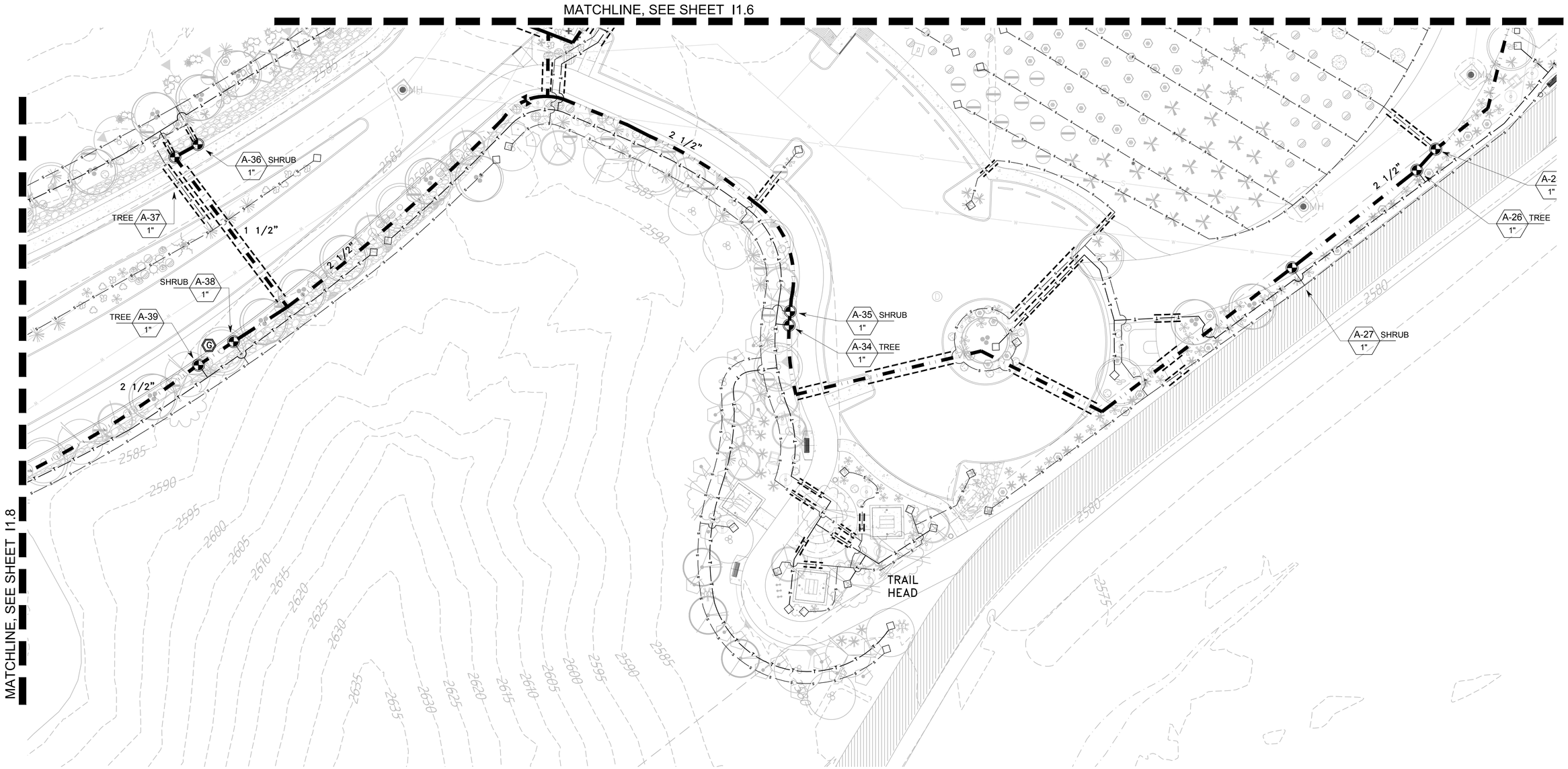

The WLB Group INC.

WLB

Engineering Planning Surveying
Landscape Architecture Urban Design
Offices located in Tucson, Phoenix, Flagstaff, Arizona, and Las Vegas, Nevada
4444 East Broadway
Tucson, Arizona (520) 881-7480

0' 20' 40' 60'

C:\Users\Public\Docu□ents\BU 12.12.10\WLB La Posada\181057 la posada flp 61-I1.7.dwg

IRRIGATION PLAN

ASIC PROFESSIONAL MEMBER

Irrigation Consultant:
Carl Kominsky L.A., Inc.
5609 N. Camino Del Sol Tucson, AZ 85718 (520)740-0700

Call at least two full working days before you begin excavation
ARIZONA 811
Arizona Blue Stake, Inc.
Dial 8-1-1 or 1-800-STAKE-IT (782-5348)
In Maricopa County: (602) 263-1100

REGISTERED LANDSCAPE ARCHITECT
1092S
CARL S. KOMINSKY
12/2/21
ARIZONA, U.S.A.
EXPIRES 6/30/2024

FINAL LANDSCAPE PLAN
LA POSADA AT PUSCH RIDGE
PHASE 1
(REVISION TO FINAL LANDSCAPE PLAN FOR NAKOMA SKY)
PHASES 1, 2, 3 AND FUTURE PHASES

ROONEY RANCH AREA Z RECORDED IN BOOK 62 M&P, PAGE 4, LOTS 1–68 AND COMMON AREAS "A", "B", AND "C" BEING A PORTION OF SECTION 7, TOWNSHIP 12 SOUTH, RANGE 14 EAST, G & S.R.M. TOWN OF ORO VALLEY, PIMA COUNTY, ARIZONA

DECEMBER 2021
WLB NO. 181057–G–E02
CONTOUR INTERVAL: 1' SCALE: 1"=20'

□1.□

REFERENCE CASE #'S:
OV1601351
OV115–027
OV914–008
OV914–007A
OV903–03A
(O)15–14

The WLB Group INC.

WLB

Engineering Planning Surveying
Landscape Architecture Urban Design
Offices located in Tucson, Phoenix, Flagstaff, Arizona, and Las Vegas, Nevada
4444 East Broadway
Tucson, Arizona (520) 881-7480

0' 20' 40' 60'

C:\Users\Public\Docu□ents\BU 12.12.10\WLB La Posada\181057 la posada flp 62-I1.8.dwg

IRRIGATION PLAN

ASIC PROFESSIONAL MEMBER

Irrigation Consultant:
Carl Kominsky L.A., Inc.
5609 N. Camino Del Sol Tucson, AZ 85718 (520)740-0700

Call at least two full working days before you begin excavation.
ARIZONA 811
Arizona Blue Stake, Inc.
Dial 8-1-1 or 1-800-STAKE-IT (782-5348)
In Maricopa County: (602) 263-1100

REGISTERED LANDSCAPE ARCHITECT
10925
CARL S. KOMINSKY
ARIZONA, U.S.A.
12/13/21
EXPIRES 6/30/2024

FINAL LANDSCAPE PLAN
LA POSADA AT PUSCH RIDGE
PHASE 1
(REVISION TO FINAL LANDSCAPE PLAN FOR NAKOMA SKY)
PHASES 1, 2, 3 AND FUTURE PHASES

ROONEY RANCH AREA Z RECORDED IN BOOK 62 M&P, PAGE 4, LOTS 1–68 AND COMMON AREAS "A", "B", AND "C" BEING A PORTION OF SECTION 7, TOWNSHIP 12 SOUTH, RANGE 14 EAST, G & S.R.M. TOWN OF ORO VALLEY, PIMA COUNTY, ARIZONA

DECEMBER 2021
WLB NO. 181057–G–E02
CONTOUR INTERVAL: 1' SCALE: 1"=20'

1.□

REFERENCE CASE #'S:
0V1601351
0V115–027
0V914–008
0V914–007A
0V903–03A
(O)15–14

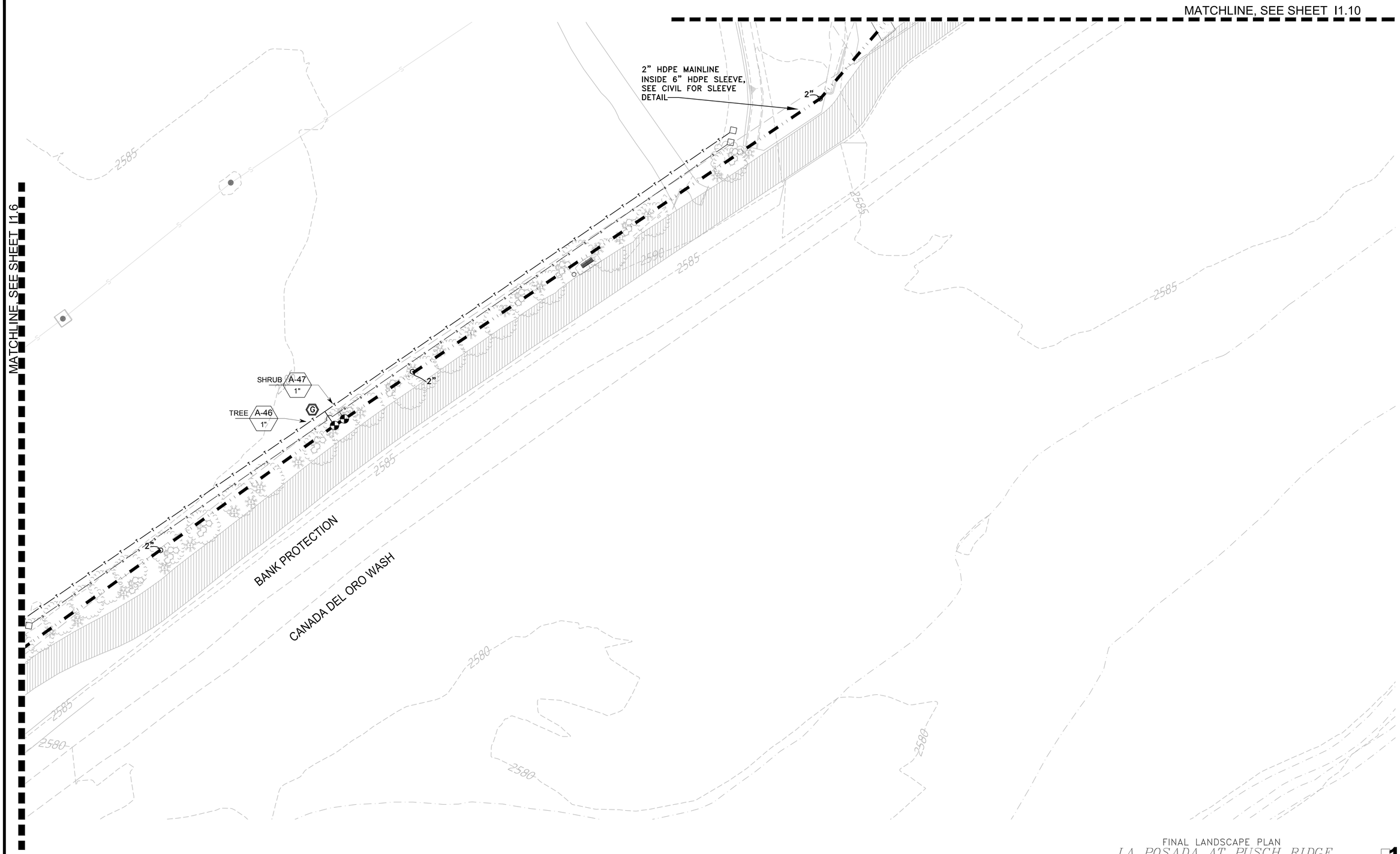

The WLB Group INC.

WLB

Engineering Planning Surveying
Landscape Architecture Urban Design
Offices located in Tucson, Phoenix, Flagstaff, Arizona, and Las Vegas, Nevada
4444 East Broadway
Tucson, Arizona (520) 881-7480

0' 20' 40' 60'

C:\Users\Public\Docu□ents\BU 12.12.10\WLB La Posada\181057 la posada flp 63-I1.9.dwg

IRRIGATION PLAN

ASIC PROFESSIONAL MEMBER

Irrigation Consultant:
Carl Kominsky L.A., Inc.
5609 N. Camino Del Sol Tucson, AZ 85718 (520)740-0700

Call at least two full working days before you begin excavation.
ARIZONA 811
Arizona Blue Stake, Inc.
Dial 8-1-1 or 1-800-STAKE-IT (782-5348)
In Maricopa County: (602) 263-1100

CARL S. KOMINSKY 10925 ARIZONA U.S.A. REGISTERED LANDSCAPE ARCHITECT EXPIRES 6/30/2014

FINAL LANDSCAPE PLAN
LA POSADA AT PUSCH RIDGE
PHASE 1
(REVISION TO FINAL LANDSCAPE PLAN FOR NAKOMA SKY)
PHASES 1, 2, 3 AND FUTURE PHASES

ROONEY RANCH AREA Z RECORDED IN BOOK 62 M&P, PAGE 4, LOTS 1–68 AND COMMON AREAS "A", "B", AND "C" BEING A PORTION OF SECTION 7, TOWNSHIP 12 SOUTH, RANGE 14 EAST, G & S.R.M. TOWN OF ORO VALLEY, PIMA COUNTY, ARIZONA

DECEMBER 2021
WLB NO. 181057–G–E02
CONTOUR INTERVAL: 1' SCALE: 1"=20'

□1.□

REFERENCE CASE #'S:
OV1601351
OV115–027
OV914–008
OV914–007A
OV903–03A
(O)15–14

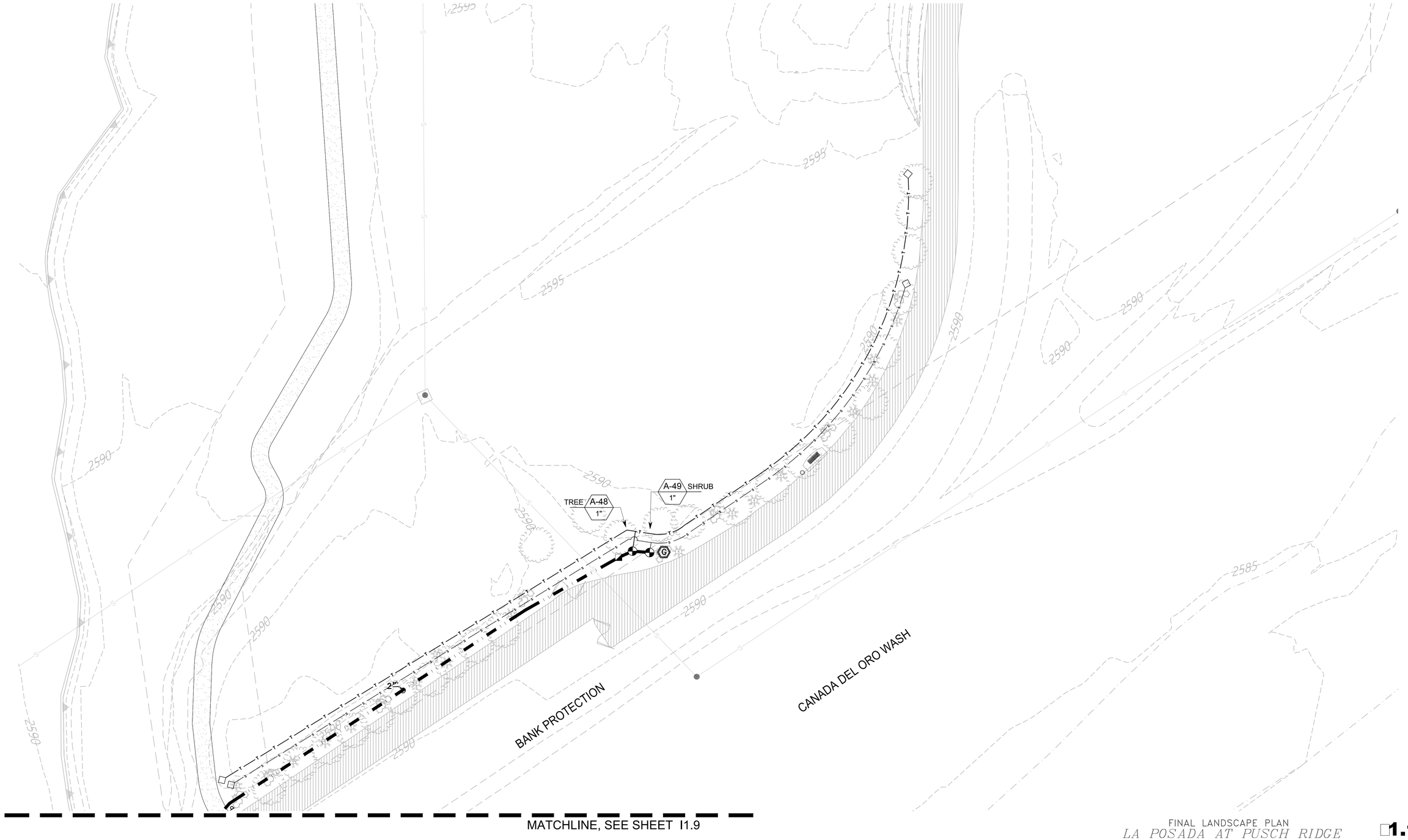

The WLB Group INC.

WLB

Engineering Planning Surveying
Landscape Architecture Urban Design
Offices located in Tucson, Phoenix, Flagstaff, Arizona, and Las Vegas, Nevada
4444 East Broadway
Tucson, Arizona (520) 881-7480

0' 20' 40' 60'

C:\Users\Public\Docu□ents\BU 12.12.10\WLB La Posada\181057 la posada flp 64-I1.10.dwg

IRRIGATION PLAN

ASIC
PROFESSIONAL MEMBER

Irrigation Consultant:
Carl Kominsky L.A., Inc.
5609 N. Camino Del Sol Tucson, AZ 85718 (520)740-0700

Call at least two full working days before you begin excavation.
ARIZONA 811
Arizona Blue Stake, Inc.
Dial 8-1-1 or 1-800-STAKE-IT (782-5348)
In Maricopa County: (602) 263-1100

CARL S. KOMINSKY 10925 REGISTERED LANDSCAPE ARCHITECT ARIZONA U.S.A. EXPIRES 6/30/2024

FINAL LANDSCAPE PLAN
LA POSADA AT PUSCH RIDGE
PHASE 1
(REVISION TO FINAL LANDSCAPE PLAN FOR NAKOMA SKY)
PHASES 1, 2, 3 AND FUTURE PHASES

ROONEY RANCH AREA Z RECORDED IN BOOK 62 M&P, PAGE 4, LOTS 1–68 AND COMMON AREAS "A", "B", AND "C" BEING A PORTION OF SECTION 7, TOWNSHIP 12 SOUTH, RANGE 14 EAST, G & S.R.M. TOWN OF ORO VALLEY, PIMA COUNTY, ARIZONA

DECEMBER 2021
WLB NO. 181057–G–E02
CONTOUR INTERVAL: 1' SCALE: 1"=20'

□1.1□

REFERENCE CASE #'S:
OV1601351
OV115–027
OV914–008
OV914–007A
OV903–03A
(O)15–14

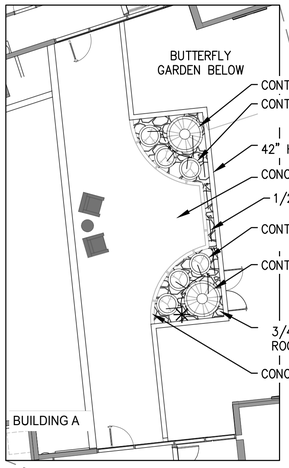

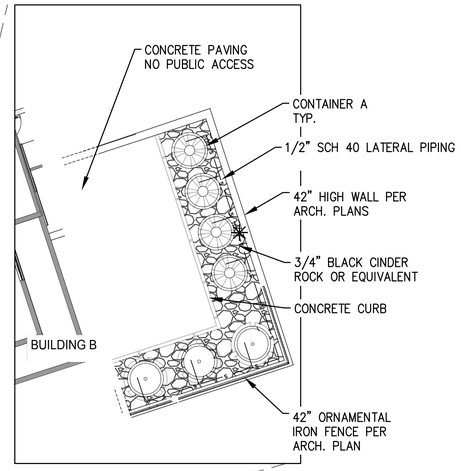

KEY MAP
SECOND FLOOR

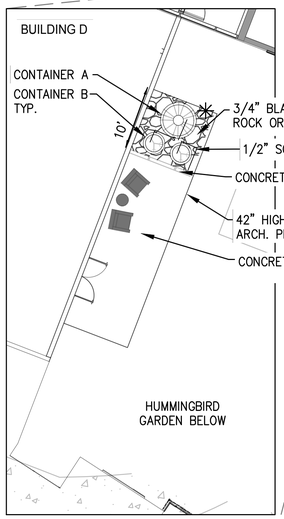

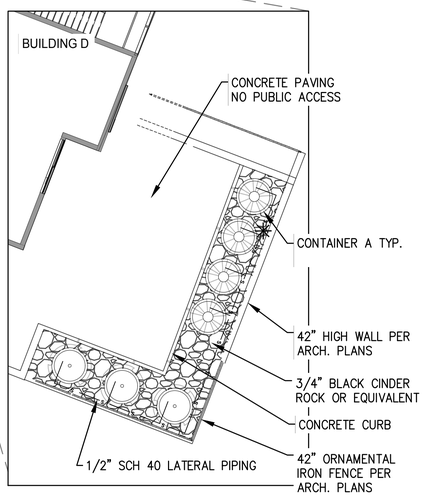

SECOND FLOOR CONTAINERS AND PLANTS

CONTAINER TABLE

CONTAINER	QTY. THIS SHEET	MANUFACTURER MAKE SIZE
A	23	OLD TOWN FIBERGLASS MODEL: DUNE SERIES DS-6040 COLOR: BRONZE 12 FINISH: SAND SIZE: 60" DIA. x 40" HT. x 28" BASE. PROVIDE SUB-IRRIGATION x DRAINAGE HOLE WEIGHT: 160 lbs
B	8	OLD TOWN FIBERGLASS MODEL: DUNE SERIES DS-4432 COLOR: BRONZE 12 FINISH: SAND SIZE: 44" DIA. x 32" HT. x 20" BASE. PROVIDE SUB-IRRIGATION x DRAINAGE HOLE WEIGHT: 99 lbs

PLANTER LEGEND

SYMBOL	PLANT NAME
	DASYLIRION LONGISSIMUM TOOTHLESS SPOON
	PEDILANTHUS MACROCARPUS LADY'S SLIPPER LADY'S SLIPPER
	SALVIA GREGGII AUTUMN SAGE
	SOPHORA SECUNDIFLORA TEXAS MOUNTAIN LAUREL

NOTES

1. CONTAINERS TO BE TOP DRESSED WITH 1" SCREENED DECORATIVE ROCK.
   COLOR: WILDCAT RED (OR EQUAL).
2. COORDINATE DRAINAGE, IRRIGATION CONDUIT AND SLEEVING WITH GENERAL CONTRACTOR.
3. SHIM CONTAINERS LEVEL AS NEEDED.
4. DUE TO THE CONDITIONED WATER PLANTS AND SOIL MAY NEED TO BE REPLACED PERIODICALLY.

✳ NOTE:
P.O.C. LOCATION MAY CHANGE IN FIELD

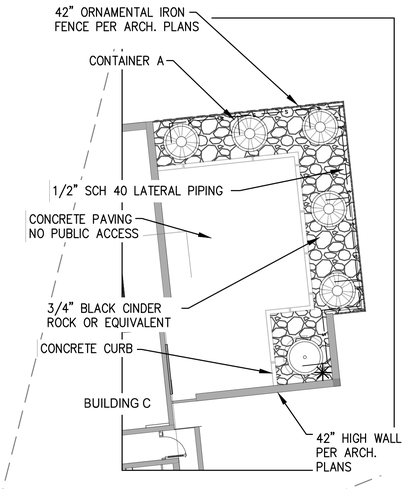

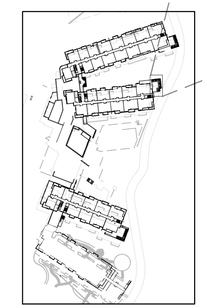

KEY MAP THIRD FLOOR

THIRD FLOOR CONTAINER AND PLANTS

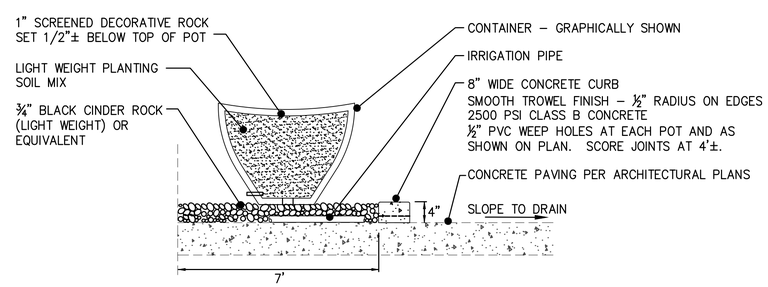

NOTE: WATER PROOFING TO BE APPLIED ON CONCRETE PAVING UNDER CINDER ROCK PER ARCHITECTURAL PLANS.

1 CONTAINER

FINAL LANDSCAPE PLAN
LA POSADA AT PUSCH RIDGE
PHASE 1
(REVISION TO FINAL LANDSCAPE PLAN FOR NAKOMA SKY)
PHASES 1, 2, 3 AND FUTURE PHASES

ROONEY RANCH AREA Z RECORDED IN BOOK 62 M&P, PAGE 4, LOTS 1–68 AND COMMON AREAS "A", "B", AND "C" BEING A PORTION OF SECTION 7, TOWNSHIP 12 SOUTH, RANGE 14 EAST, G & S.R.M. TOWN OF ORO VALLEY, PIMA COUNTY, ARIZONA

DECEMBER 2021
WLB NO. 181057–G–E02
CONTOUR INTERVAL: 1' SCALE: 1"=10'

L1.11

REFERENCE CASE #'S:
OV1601351
OV115–027
OV914–008
OV914–007A
OV903–03A
(O)15–14

CONTAINER IRRIGATION PLAN

The WLB Group INC.
WLB
Engineering Planning Surveying
Landscape Architecture Urban Design
Offices located in Tucson, Phoenix, Flagstaff, Arizona, and Las Vegas, Nevada
4444 East Broadway
Tucson, Arizona (520) 881-7480

0' 10' 20' 30'

C:\Users\Public\Docu ents\BU 12.12.10\WLB La Posada\181057 la posada flp 65-l1.11.dwg

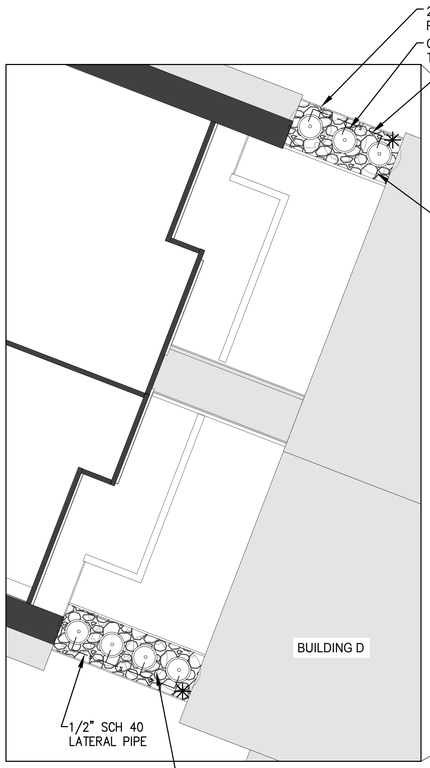

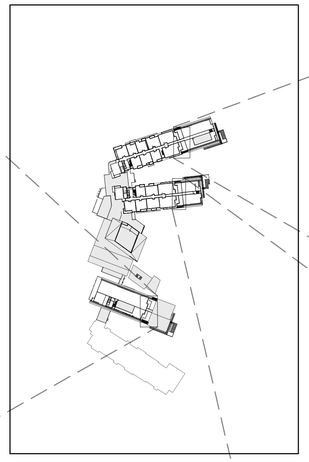

KEY MAP FIFTH FLOOR

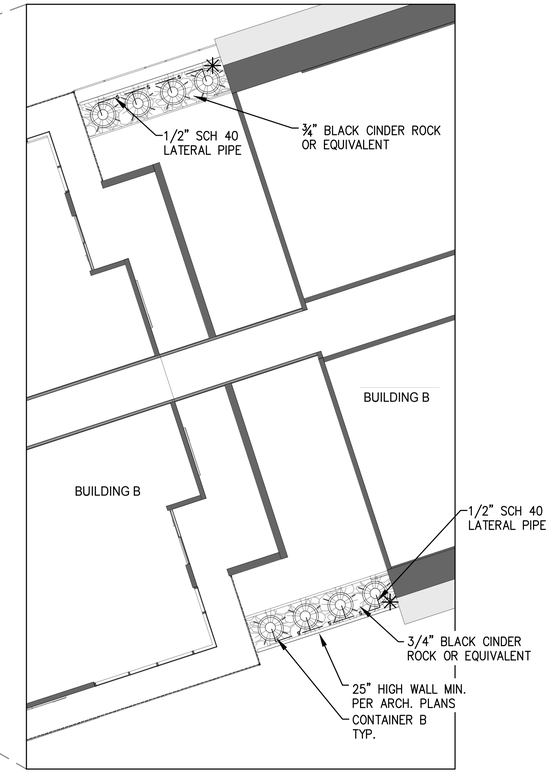

✳ NOTE:
P.O.C. LOCATION MAY CHANGE IN FIELD

CONTAINER TABLE

CONTAINER	QTY. THIS SHEET	MANUFACTURER MAKE & SIZE
B	21	OLD TOWN FIBERGLASS MODEL: DUNE SERIES DS-4432 COLOR: BRONZE 12 FINISH: SAND SIZE: 44" DIA. & 32" HT. & 20" BASE. PROVIDE SUB-IRRIGATION & DRAINAGE HOLE WEIGHT: 99 lbs

PLANTER LEGEND

SYMBOL	PLANT NAME
	DASYLIRION LONGISSIMUM TOOTHLESS SPOON
	SOPHORA SECUNDIFLORA TEXAS MOUNTAIN LAUREL

NOTES

SEE SHEET H1.8 FOR NOTES AND DETAILS.

FIFTH FLOOR CONTAINERS AND PLANTS

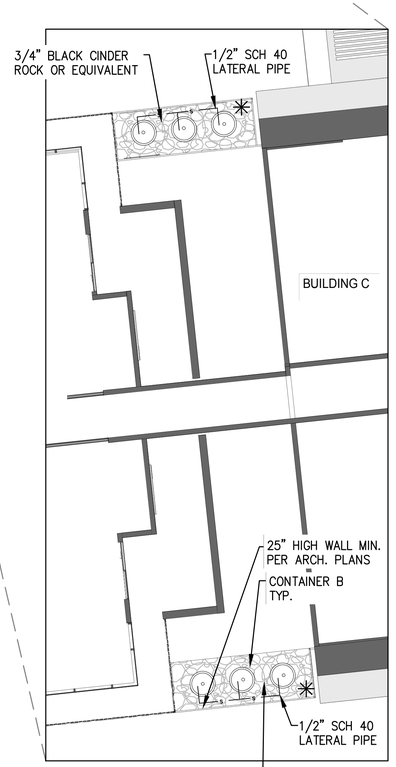

CONTAINER IRRIGATION PLAN

The WLB Group INC.
WLB
Engineering Planning Surveying
Landscape Architecture Urban Design
Offices located in Tucson, Phoenix, Flagstaff, Arizona, and Las Vegas, Nevada
4444 East Broadway
Tucson, Arizona (520) 881-7480

0' 10' 20' 30'

C:\Users\Public\Documents\BU 12.12.10\WLB La Posada\181057 la posada flp 66-l1.12.dwg

REGISTERED LANDSCAPE ARCHITECT
10925
CARL S. KOMINSKY
STATE OF ARIZONA
EXPIRES 6/30/2021

FINAL LANDSCAPE PLAN
LA POSADA AT PUSCH RIDGE
PHASE 1
(REVISION TO FINAL LANDSCAPE PLAN FOR NAKOMA SKY)
PHASES 1, 2, 3 AND FUTURE PHASES

ROONEY RANCH AREA Z RECORDED IN BOOK 62 M&P, PAGE 4, LOTS 1–68 AND COMMON AREAS "A", "B", AND "C" BEING A PORTION OF SECTION 7, TOWNSHIP 12 SOUTH, RANGE 14 EAST, G & S.R.M. TOWN OF ORO VALLEY, PIMA COUNTY, ARIZONA

DECEMBER 2021
WLB NO. 181057–G–E02
CONTOUR INTERVAL: 1' SCALE: 1"=10'

1.1

REFERENCE CASE #'S:
OV1601351
OV115–027
OV914–008
OV914–007A
OV903–03A
(O)15–14

NOTES:
1. ALL WIRE TO BE INSTALLED AS PER LOCAL CODE. TAPE AND BUNDLE WIRE EVERY 20' PROVIDE EXPANSION COILS AT EA. WIRE CONNECTION IN VALVE BOX (WRAP AROUND 1/2" PIPE 15 TIMES)
2. COMPACT SOIL AROUND VALVE BOX TO SAME DENSITY AS UNDISTURBED ADJACENT SOIL.
3. ALL THREADED PVC JOINTS TO BE WRAPPED WITH TEFLON TAPE OR APPROVED EQUAL PVC TAPE.
4. SEAL BOTTOM AND ALL OPENINGS WITH GEOTEXTILE FABRIC.
5. PROVIDE 3' SLACK IN 2 WIRE INSIDE VALVE BOX.

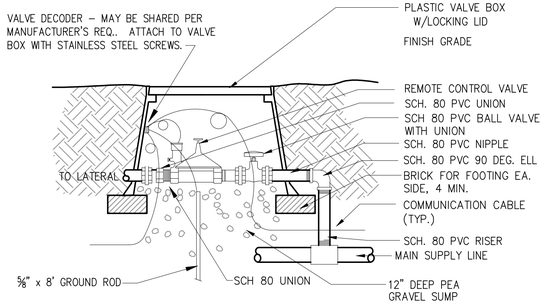

1 REMOTE CONTROL VALVE
N.T.S.

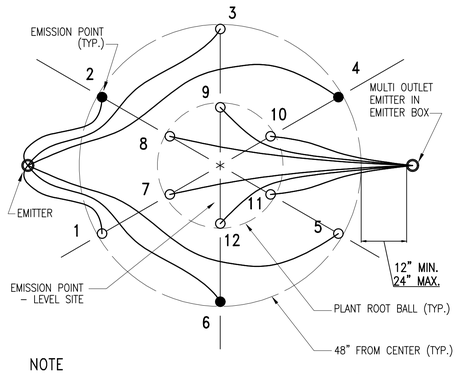

NOTE
WHEN 9 EMISSION POINTS ARE SHOWN IN EMITTER SCHEDULE, USE #2, 4, 6 AND 7–12.

2 EMITTER LOCATION – TREES W/ 2 MULTI-PORTS
NTS

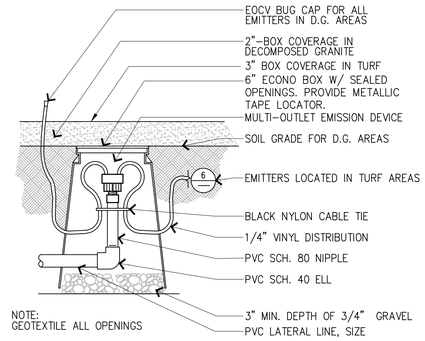

NOTE:
GEOTEXTILE ALL OPENINGS

3 MULTI OUTLET EMITTER DETAIL
N.T.S.

NOTES:
1. ALL WIRE TO BE INSTALLED AS PER LOCAL CODE. TAPE AND BUNDLE WIRE EVERY 20' PROVIDE EXPANSION COILS AT EA. WIRE CONNECTION IN VALVE BOX (WRAP AROUND 1/2" PIPE 15 TIMES)
2. COMPACT SOIL AROUND VALVE BOX TO SAME DENSITY AS UNDISTURBED ADJACENT SOIL.
3. WRAP ALL THREADED PVC JOINTS WITH TEFLON TAPE OR APPROVED EQUAL.
4. SEAL BOTTOM AND ALL OPENINGS WITH GEOTEXTILE FABRIC.
5. PROVIDE 3' SLACK IN 2 WIRE INSIDE VALVE BOX.

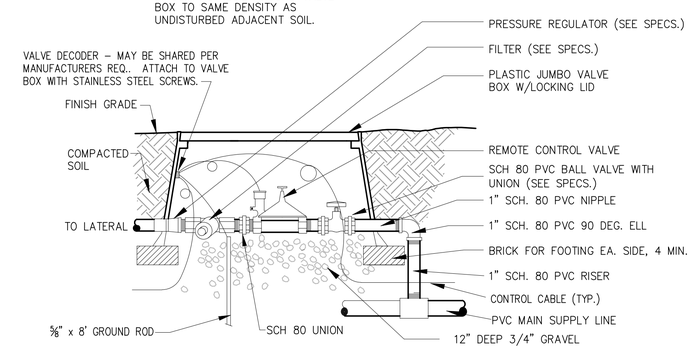

4 DRIP VALVE ASSEMBLY DETAIL
N.T.S.

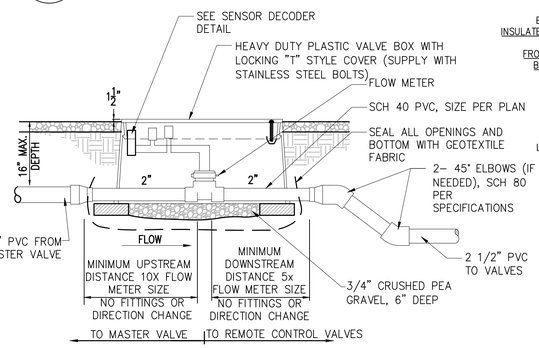

5 FLOW METER INSTALLATION
NTS

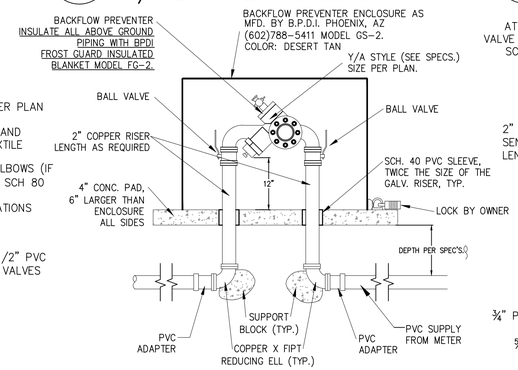

6 REDUCED PRESSURE BACKFLOW PREVENTER DETAIL
NTS

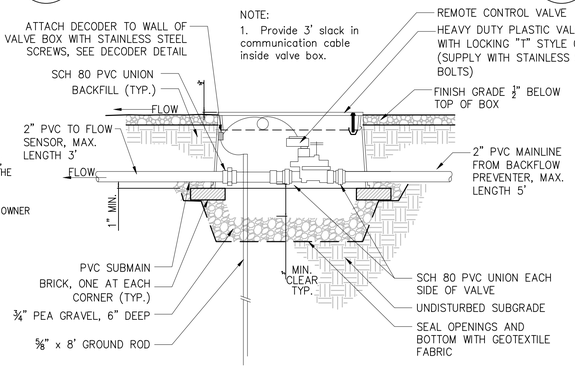

NOTE:
1. Provide 3' slack in communication cable inside valve box.

7 MASTER VALVE
NTS
3" AND LARGER

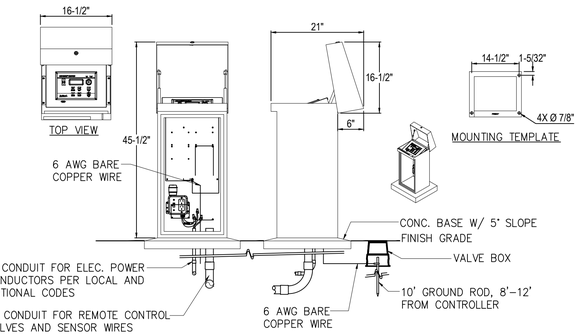

8 EXTERIOR STAINLESS STEEL PEDESTAL CONTROLLER
NTS

NOTE:
LOCATE ALL EMISSION POINTS ON THE UPHILL SIDE OF THE PLANT MATERIAL AND WHERE INDICATED ON THE DETAIL.

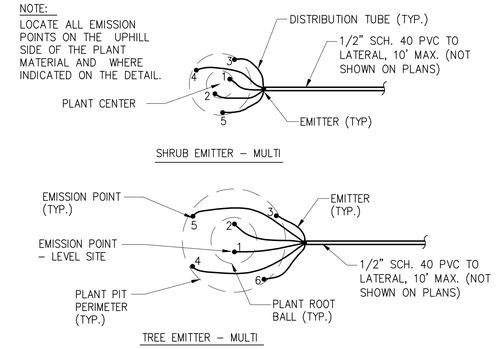

NOTE: EMISSION POINTS ARE NUMBERED IN THE ORDER OF PLACEMENT

9 MULTI–OUTLET EMITTER LOCATION
N.T.S.

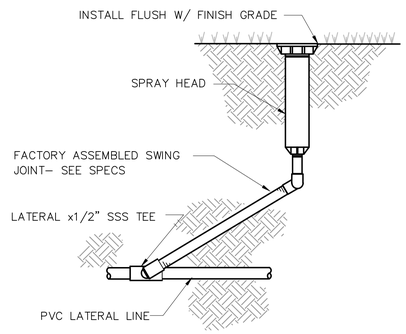

10 SPRAY HEAD DETAIL
N.T.S.

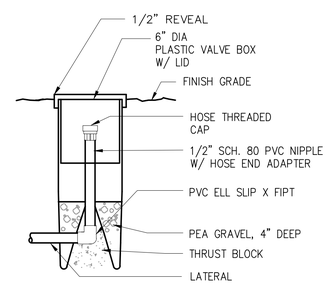

TO BE USED ON ENDS OF ALL EMITTER LINES – LOCATE WHERE SHOWN ON PLAN.

11 FLUSH CAP ASSEMBLY
N.T.S.

NOTE: USE TEFLON TAPE ON ALL THREADED CONNECTIONS.

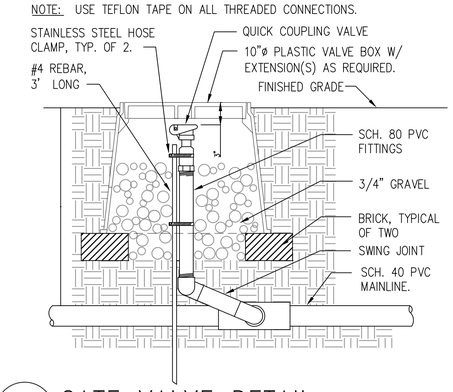

12 GATE VALVE DETAIL
NTS

NOTE: COMPACT SOIL AROUND VALVE PIT ASSEMBLY TO SAME DENSITY AS UNDISTURBED ADJACENT SOIL.

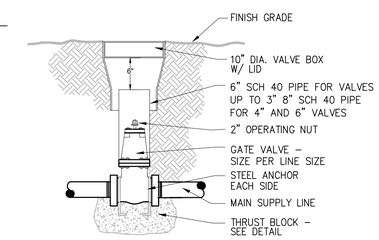

13 GATE VALVE DETAIL
NTS

FINAL LANDSCAPE PLAN
LA POSADA AT PUSCH RIDGE
PHASE 1
(REVISION TO FINAL LANDSCAPE PLAN FOR NAKOMA SKY)
PHASES 1, 2, 3 AND FUTURE PHASES

ROONEY RANCH AREA Z RECORDED IN BOOK 62 M&P, PAGE 4, LOTS 1–68 AND COMMON AREAS "A", "B", AND "C" BEING A PORTION OF SECTION 7, TOWNSHIP 12 SOUTH, RANGE 14 EAST, G & S.R.M. TOWN OF ORO VALLEY, PIMA COUNTY, ARIZONA

DECEMBER 2021
WLB NO. 181057–G–E02
CONTOUR INTERVAL: 1'

1.1

REFERENCE CASE #'S:
OV1601351
OV115–027
OV914–008
OV914–007A
OV903–03A
(O)15–14

Irrigation Consultant:
Carl Kominsky L.A., Inc.
5609 N. Camino Del Sol Tucson, AZ 85718 (520)740–0700

ASIC PROFESSIONAL MEMBER

CARL S. KOMINSKY 10925 REGISTERED LANDSCAPE ARCHITECT ARIZONA U.S.A. EXPIRES 6/30/2024

The WLB Group INC. **WLB**
Engineering Planning Surveying
Landscape Architecture Urban Design
Offices located in Tucson, Phoenix, Flagstaff, Arizona, and Las Vegas, Nevada
4444 East Broadway
Tucson, Arizona (520) 881-7480

C:\Users\Public\Docu□ents\BU 12.12.10\WLB La Posada\181057 la posada flp l1.13 Details.dwg

IRRIGATION DETAILS

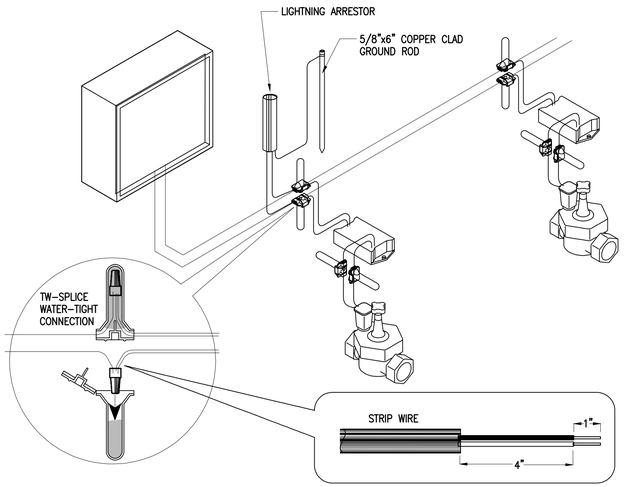

1 2-WIRE CONNECTION DETAIL
N.T.S.

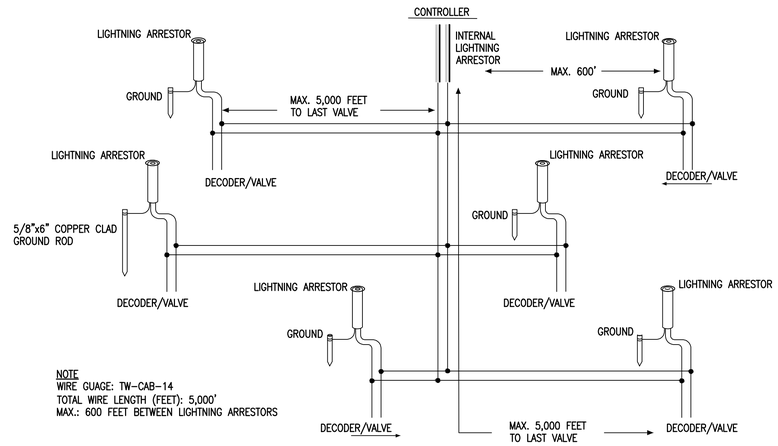

2 2-WIRE GRID CONFIGURATION
N.T.S.

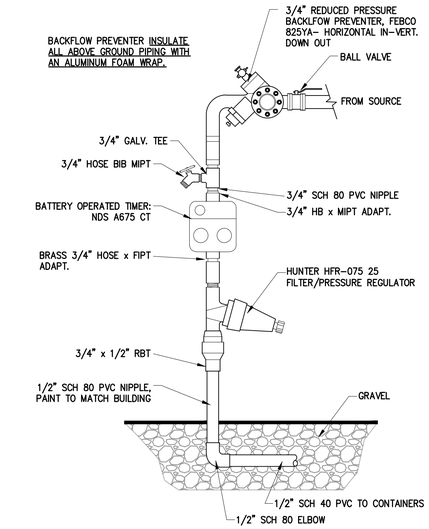

3 CONTAINER P.O.C. & CONTROLLER
N.T.S.

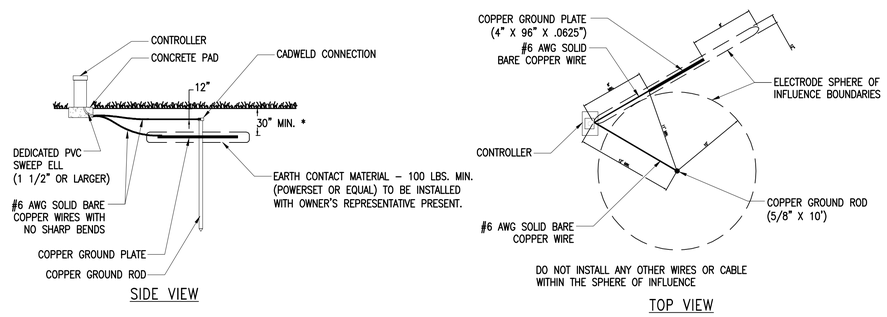

4 CONTROLLER GROUNDING DETAIL
N.T.S.

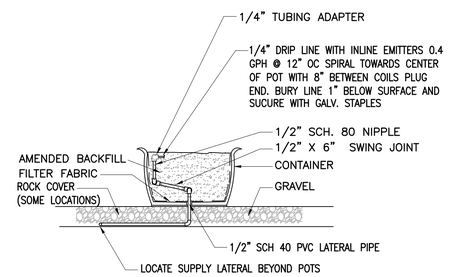

5 CONTAINER IRRIGATION DETAIL
N.T.S.

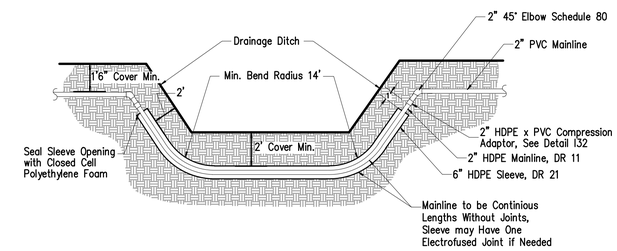

6 HDPE SLEEVE AT WASH CROSSING
N.T.S.

The WLB Group INC
WLB
Engineering Planning Surveying
Landscape Architecture Urban Design
Offices located in Tucson, Phoenix, Flagstaff, Arizona, and Las Vegas, Nevada
4444 East Broadway
Tucson, Arizona (520) 881-7480

C:\Users\Public\Docu□ents\BU 12.12.10\WLB La Posada\181057 la posada flp I1.14 Details.dwg

IRRIGATION DETAILS

ASIC PROFESSIONAL MEMBER

Irrigation Consultant:
Carl Kominsky L.A., Inc.
5609 N. Camino Del Sol Tucson, AZ 85718 (520)740-0700

CARL S. KOMINSKY 10925 REGISTERED LANDSCAPE ARCHITECT STATE OF ARIZONA EXPIRES 6/30/2024

FINAL LANDSCAPE PLAN
LA POSADA AT PUSCH RIDGE
PHASE 1
(REVISION TO FINAL LANDSCAPE PLAN FOR NAKOMA SKY)
PHASES 1, 2, 3 AND FUTURE PHASES

ROONEY RANCH AREA Z RECORDED IN BOOK 62 M&P, PAGE 4, LOTS 1-68 AND COMMON AREAS "A", "B", AND "C" BEING A PORTION OF SECTION 7, TOWNSHIP 12 SOUTH, RANGE 14 EAST, G & S.R.M. TOWN OF ORO VALLEY, PIMA COUNTY, ARIZONA

DECEMBER 2021
WLB NO. 181057-G-E02
CONTOUR INTERVAL: 1'

1.14

REFERENCE CASE #'S:
OV1601351
OV115-027
OV914-008
OV914-007A
OV903-03A
(O)15-14